# 轉角高精密型行星減速機

# PRECISION PLANETARY GEARBOX

EVB

### 1. 静音
使用斜齒輪實現順暢安静的運轉

### 2. 高精度
背隙低于3弧分、定位精確。

### 3. 高剛性、高扭矩
使用整體式滚珠軸承，大大提高了剛性和扭矩。

### 4. 法蘭、連接器方式
可以安裝到馬達上。

### 5. 無潤滑脂泄漏
使用高粘度、不易分離的潤滑脂，有效防止潤滑脂泄漏。

### 6. 維護方便
在產品壽命期内無需更換潤滑脂，安裝更便捷。

1.Quiet operation
Helical gears are used to achieve smooth and quiet operation.
2.High precision
The backlash is less than 3 arcmin and the positioning is accurate.
3.High rigidity & torqueThe use of integral ball bearings greatly improves the rigidity and torque.
4.Methods of flange and connector
It can be installed on any motor in the world.
5.No grease leakage
The use of grease with high viscosity which is not easy to separate effectively prevents the grease leakage.
6.Convenient maintenance
No need to replace the grease in the product life period , and the installation is more convenient.

## 減速機的選型 Model Selection of Speed Reducers

### EVB 系列 Type

EVB090 – 10 – S1 – P1 / 馬達

**減速機型式 Reducer Model**

EVB042，EVB060，EVB090，EVB115
EVB142，EVB180，EVB220

**出力軸鍵槽 Output Shaft Keyway**

S1：實心軸，無鍵槽
(Solid Output Shaft No Keyway)
S2：標準品，有鍵槽
Standard (Keyway)
S3：輸出爲孔
Output for holes

**馬達型號 Motor Model**

馬達制造商及型號
Motor Manufacturer & Model

**減速比 Ratio**

單節 1–stage：3，4，5，6，7，8，9，10，14，16，20
雙節 2–stage：15，20，25，30，35，40，50，70，
80，100，120，140，160，180，200

**背隙等級 Backlash Grade**

P0：高精密背隙 High precision backlash
P1：精密背隙 Precision backlash
P2：標準背隙 Standard backlash

### 减速器匹配电机需要确认下列尺寸：
The gearbox matching motor needs to be confirmed with following dimensions :

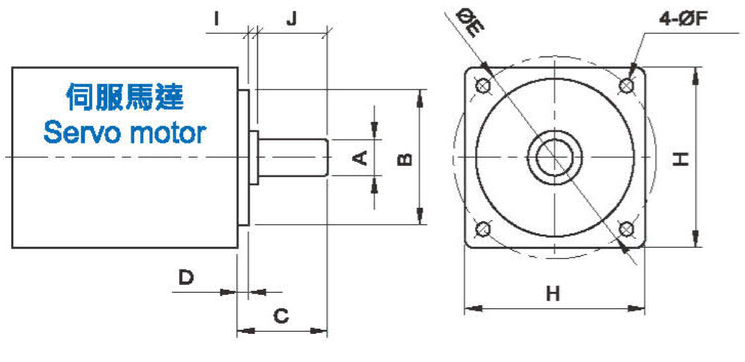


| A | B | C | D | E | F | H | I | J |
|---|---|---|---|---|---|---|---|---|
| | | | | | | | | |

**行星速機訂購編號**

減速機型 Type — 型號 Model — 速比 Ratio — 出力軸鍵槽 Output Shaft Keyway — 背隙等級 Backlash Class — 馬達型號 MOTOR NO.

# EVB 減速機性能資料 Reducer Specifications

| 規格 Specs | 單位 Unit | 節數 Stage | 減速比 Ratio | EVB042 | EVB060 | EVB090 | EVB115 | EVB142 | EVB180 | EVB220 |
|---|---|---|---|---|---|---|---|---|---|---|
| 額定輸出力矩$T_{2N}$ Rated Output Torque | Nm | 1 | 3 | 20 | 55 | 130 | 208 | 342 | 588 | 1140 |
| | | | 4 | 19 | 50 | 140 | 290 | 542 | 1050 | 1700 |
| | | | 5 | 22 | 60 | 160 | 330 | 650 | 1200 | 2000 |
| | | | 6 | 20 | 55 | 150 | 310 | 600 | 1100 | 1900 |
| | | | 7 | 19 | 50 | 140 | 300 | 550 | 1100 | 1800 |
| | | | 8 | 17 | 50 | 140 | 290 | 542 | 1050 | 1700 |
| | | | 9 | 14 | 40 | 100 | 230 | 450 | 900 | 1500 |
| | | | 10 | 14 | 60 | 160 | 330 | 650 | 1200 | 2000 |
| | | | 14 | 19 | 50 | 140 | 300 | 550 | 1100 | 1800 |
| | | | 20 | 14 | 40 | 100 | 230 | 450 | 900 | 1500 |
| | | 2 | 15 | 20 | 55 | 130 | 208 | 342 | 588 | 1140 |
| | | | 20 | 20 | 50 | 140 | 290 | 542 | 1050 | 1700 |
| | | | 25 | 22 | 60 | 160 | 330 | 650 | 1200 | 2000 |
| | | | 30 | 22 | 55 | 130 | 208 | 342 | 588 | 1140 |
| | | | 35 | 22 | 60 | 160 | 330 | 650 | 1200 | 2000 |
| | | | 40 | 22 | 50 | 140 | 290 | 542 | 1050 | 1700 |
| | | | 50 | 22 | 60 | 160 | 330 | 650 | 1200 | 2000 |
| | | | 70 | 22 | 60 | 160 | 330 | 600 | 1200 | 2000 |
| | | | 80 | 22 | 50 | 140 | 290 | 542 | 1050 | 1700 |
| | | | 100 | 22 | 60 | 160 | 330 | 650 | 1200 | 2000 |
| | | | 120 | — | — | 150 | 310 | 600 | 1100 | 1900 |
| | | | 140 | — | — | 140 | 300 | 550 | 1100 | 1800 |
| | | | 160 | — | — | 120 | 260 | 500 | 1000 | 1600 |
| | | | 180 | — | — | 98 | 225 | 445 | 895 | 1495 |
| | | | 200 | — | — | 100 | 230 | 450 | 900 | 1500 |
| 最大輸出扭矩 $T_{2NOT}$[1]/ Max.Output Torque | Nm | 1,2 | 3~200 | 3倍額定輸出力矩/3Times of Nominal Output Torque | | | | | | |
| 額定輸入轉速$n_{1N}$/Rated Input Speed | rpm | 1,2 | 3~200 | 3000 | 3000 | 3000 | 3000 | 2500 | 2000 | 2000 |
| 最大輸入轉速$n_{1B}$/Max.Input Speed | rpm | 1,2 | 3~200 | 6000 | 6000 | 6000 | 5500 | 4500 | 4500 | 4000 |
| 精密背隙P0 / Precision Backlash P0 | arcmin | 1 | 3~20 | ≤2 | ≤2 | ≤2 | ≤2 | ≤2 | ≤2 | ≤2 |
| | | 2 | 15~200 | ≤4 | ≤4 | ≤4 | ≤4 | ≤4 | ≤4 | ≤4 |
| 精密背隙P1 / Precision Backlash P1 | arcmin | 1 | 3~20 | ≤4 | ≤4 | ≤4 | ≤4 | ≤4 | ≤4 | ≤4 |
| | | 2 | 15~200 | ≤6 | ≤6 | ≤6 | ≤6 | ≤6 | ≤6 | ≤6 |
| 標準背隙P2 / Standard Backlash P2 | arcmin | 1 | 3~20 | ≤6 | ≤6 | ≤6 | ≤6 | ≤6 | ≤6 | ≤6 |
| | | 2 | 15~200 | ≤8 | ≤8 | ≤8 | ≤8 | ≤8 | ≤8 | ≤8 |
| 扭轉剛性/Torsional Rigidity | Nm/arcmin | 1,2 | 3~200 | 3 | 6 | 14 | 25 | 56 | 140 | 220 |
| 容許徑向力$F_{2rB}$[2] / Max.Radial Force | N | 1,2 | 3~200 | 780 | 1300 | 3200 | 6750 | 9400 | 14500 | 50000 |
| 容許軸向力$F_{2a1B}$[2] / Max.Axial Force | N | 1,2 | 3~200 | 330 | 700 | 1580 | 3300 | 4700 | 7200 | 28000 |
| 使用壽命 / Service Life | hr | 1,2 | 3~200 | 21000 h | | | | | | |
| 效率 η /Efficiency | % | 1 | 3~20 | ≥93% | | | | | | |
| | | 2 | 25~200 | ≥90% | | | | | | |
| 重量/Weight | kg | 1 | 3~20 | 0.9 | 1.5 | 6.4 | 13 | 24.5 | 51 | 83 |
| | | 2 | 25~200 | 1.2 | 2.1 | 7.8 | 14.2 | 27.5 | 54 | 95 |
| 使用溫度 / Operating Temperature | ℃ | 1,2 | 3~200 | (−15℃ ~ +90℃) | | | | | | |
| 潤滑/Lubrication | | 1,2 | 3~200 | 全合成潤滑油脂(Synthetic Grease) | | | | | | |
| 防護等級 / Protection Class | | 1,2 | 3~200 | IP65 | | | | | | |
| 安裝方向 / Mounting Position | | 1,2 | 3~200 | 任意方向(Any Direction) | | | | | | |
| 噪音值(n1=3000rpm，無負載)/ Noise Level | dB(A) | 1,2 | 3~200 | ≤65 | ≤65 | ≤68 | ≤68 | ≤70 | ≤72 | ≤74 |

# 減速機轉動慣量 Reducer Rotary Inertia

| 規格 Specs | 單位 Unit | 節數 Stage | 減速比 Ratio | EVB042 | EVB060 | EVB090 | EVB115 | EVB142 | EVB180 | EVB220 |
|---|---|---|---|---|---|---|---|---|---|---|
| 轉動慣量J1 Moment of Inertia | $kg.cm^2$ | 1 | 3~10 | 0.09 | 0.35 | 2.25 | 6.84 | 23.4 | 68.9 | 135.4 |
| | | | 14–20 | 0.03 | 0.07 | 1.87 | 6.25 | 21.8 | 65.6 | 119.8 |
| | | 2 | 15~100 | 0.09 | 0.09 | 0.35 | 2.25 | 6.84 | 23.4 | 68.9 |
| | | | 120~200 | — | — | 0.31 | 1.87 | 6.25 | 21.8 | 65.6 |

1. 最大加速力矩T2B=60% of T2NOT　　2. 輸出轉數100rpm時，作用於輸出軸中心位置。
3. 三段大減速比不在上表中，有軸加長和加大設計，需要用到請告知銷售人員。

1. The Max. acceleration torque T2B=60% of T2NOT　2. When output speed is 100rpm, inertia acts on the output shaft center position.
3. 3-stage big ratios are not in the above table. There is shaft lengthening and enlarging design. Please tell sales person if you need it.

# MODEL：EVB

單段 1–Stage

速比 Ratio：3，4，5，6，7，8，9，10，14，16，20

## 外形尺寸圖 Dimensions：

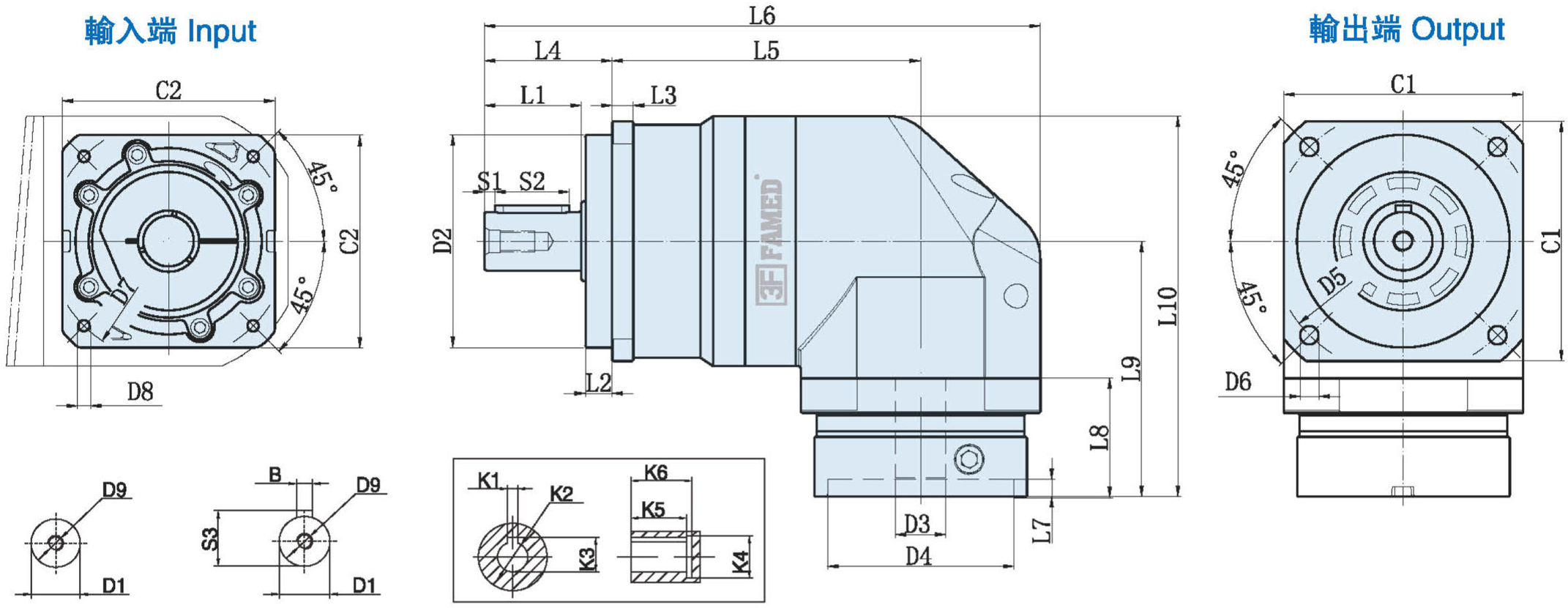


出力軸形式 S1
Output shaft type S1

出力軸形式 S2
Output shaft type S2

輸出孔形式 S3
Output hole type S3

Unit:mm

| 尺寸 Size | EVB042–L1 | EVB060–L1 | EVB090–L1 | EVB115–L1 | EVB142–L1 | EVB180–L1 | EVB220–L1 |
|---|---|---|---|---|---|---|---|
| D1 | ϕ13 | ϕ16 | ϕ22 | ϕ32 | ϕ40 | ϕ55 | ϕ75 |
| D2 | ϕ35 | ϕ50 | ϕ80 | ϕ110 | ϕ130 | ϕ160 | ϕ180 |
| D3 | ϕ8(≤11) | ϕ14(≤14) | ϕ19(≤24) | ϕ24(≤32) | ϕ35(≤42) | ϕ38(≤50) | ϕ55(≤55) |
| D4 | ϕ30(30–50) | ϕ50 (50–70) | ϕ70 (50–110) | ϕ110 (50–130) | ϕ114.3(95–180) | ϕ180(95–180) | ϕ215(180–255) |
| D5 | ϕ50 | ϕ70 | ϕ100 | ϕ130 | ϕ165 | ϕ215 | ϕ250 |
| D6 | 4–ϕ3.4 | 4–ϕ5.5 | 4–ϕ7 | 4–ϕ9 | 4–ϕ11 | 4–ϕ13 | 4–ϕ17 |
| D7 | ϕ46(22–70) | ϕ70 (70–130) | ϕ90 (70–145) | ϕ145 (70–145) | ϕ200(90–215) | ϕ200(90–300) | ϕ235(200–300) |
| D8 | (4–M3X8L) | (4–M4*8L) | (4–M6*10L) | (4–M8*20L) | (4–M12X30L) | (4–M12X30L) | (4–M12X30L) |
| D9 | M4X0.7P | M5*0.8P*18L | M6*1.25P*19L | M12*1.75P*28L | M16X2.0P | M20X2.5P | M20X2.5P |
| L1 | 19 | 28.5 | 36.5 | 51 | 79 | 82 | 105 |
| L2 | 5.5 | 7 | 10 | 12 | 15 | 20 | 30 |
| L3 | 4 | 6 | 8 | 10 | 12 | 15 | 20 |
| L4 | 26 | 37 | 48 | 65 | 97 | 105 | 138 |
| L5 | 96 | 86 | 116 | 137.5 | 255 | 289 | 346 |
| L6 | (122) | 153 | 209 | 260 | (352) | (394) | (484) |
| L7 | (3.5) | (5) | (6.5) | (10) | (14) | (15) | (7) |
| L8 | (30) | (33) | (45) | (64) | (81) | (85) | (85) |
| L9 | (69.5) | (77.5) | (96) | (135.5) | (165) | (213.5) | (268.5) |
| L10 | (95.5) | (111.75) | (143) | (195) | (230) | (303.5) | (378.5) |
| C1 | □42 | □60 | □90 | □115 | □142 | □180 | □220 |
| C2 | (□42) | (□60) | (□80) | (□130) | (□142) | (□180) | (□220) |
| S1 | 2 | 3 | 4 | 5 | 5 | 5 | 7 |
| S2 | 16 | 22 | 28 | 40 | 65 | 70 | 90 |
| S3 | 15 | 18 | 24.5 | 35 | 43 | 59 | 79 |
| B | 5 | 5 | 6 | 10 | 12 | 16 | 20 |
| K1 | – | 3 | 6 | 8 | 10 | 14 | 16 |
| K2 | – | ϕ8 | ϕ18 | ϕ28 | ϕ38 | ϕ50 | ϕ60 |
| K3 | – | 9.2 | 21 | 31.3 | 42 | 53.8 | 64.4 |
| K4 | – | ϕ11 | ϕ24 | ϕ38 | ϕ48 | ϕ60 | ϕ72 |
| K5 | – | 16 | 30 | 27 | 35 | 43 | 60 |
| K6 | – | 18 | 35 | 32 | 40 | 50 | 65 |

注1：（ ）括號內爲可選擇範圍尺寸，（ ）括號外爲標準尺寸。
注2：減速機出力軸可以爲客户定制大小和長短。
注3：輸入尺寸依據各品牌伺服馬達或步進馬達可以有所變動。

Note 1：Inside of () is the optional range of sizes, outside of () is the standard sizes.
Note 2: The reducer output shaft size and length can be customized for customers.
Note 3: The input size can be changed according to the servomotor or stepper motor of each brand.

# MODEL：EVB

雙段 2–Stage

速比 Ratio：15，20，25，30，35，40，50，70，80
100，120，140，160，180，200

## 外形尺寸圖 Dimensions：

輸入端 Input

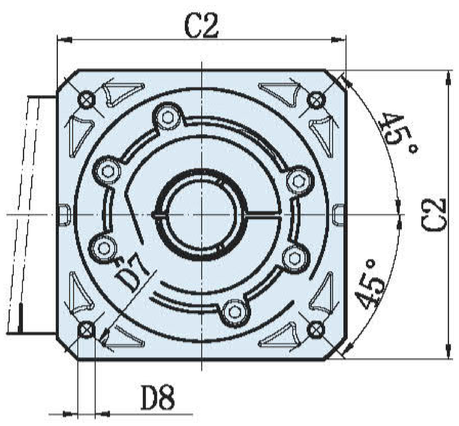


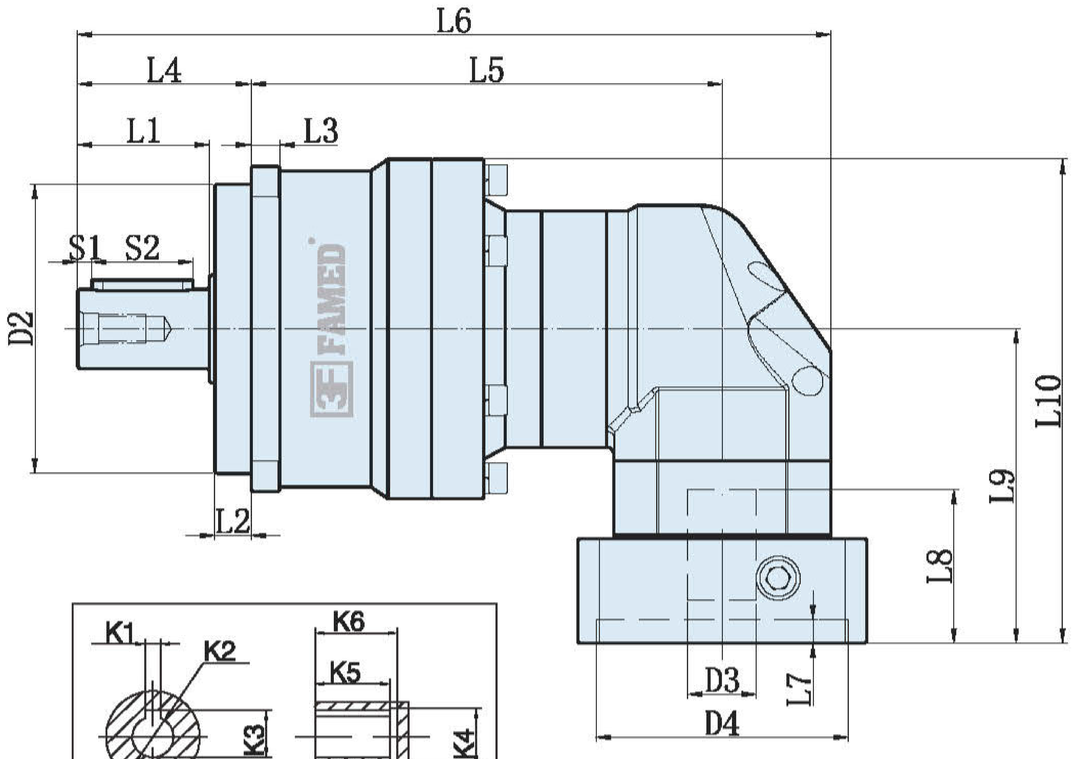


輸出端 Output

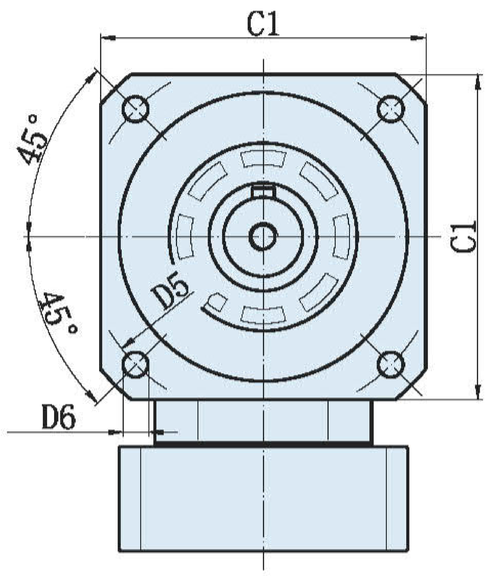


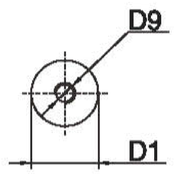


出力軸形式 S1
Output shaft type S1

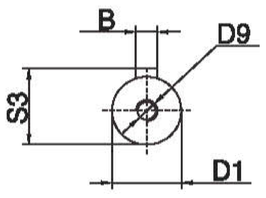


出力軸形式 S2
Output shaft type S2

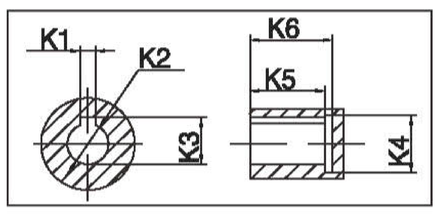


輸出孔形式 S3
Output hole type S3

Unit:mm

| 尺寸 Size | EVB042–L2 | EVB060–L2 | EVB090–L2 | EVB115–L2 | EVB142–L2 | EVB180–L2 | EVB220–L2 |
|---|---|---|---|---|---|---|---|
| D1 | ϕ13 | ϕ16 | ϕ22 | ϕ32 | ϕ40 | ϕ55 | ϕ75 |
| D2 | ϕ35 | ϕ50 | ϕ80 | ϕ110 | ϕ130 | ϕ160 | ϕ180 |
| D3 | ϕ8(≤11) | ϕ14(≤14) | ϕ19(≤24) | ϕ24(≤32) | ϕ35(≤42) | ϕ38(≤50) | ϕ55(≤55) |
| D4 | ϕ30(30–50) | ϕ50 (50–70) | ϕ70 (50–110) | ϕ110 (50–130) | ϕ114.3(95–180) | ϕ180(95–180) | ϕ215(180–255) |
| D5 | ϕ50 | ϕ70 | ϕ100 | ϕ130 | ϕ165 | ϕ215 | ϕ250 |
| D6 | 4–ϕ3.4 | 4–ϕ5.5 | 4–ϕ7 | 4–ϕ9 | 4–ϕ11 | 4–ϕ13 | 4–ϕ17 |
| D7 | ϕ46(22–70) | ϕ70 (70–130) | ϕ90 (70–145) | ϕ145 (70–145) | ϕ200(90–215) | ϕ200(90–300) | ϕ235(200–300) |
| D8 | (4–M3X8L) | (4–M4*8L) | (4–M6*10L) | (4–M8*20L) | (4–M12X30L) | (4–M12X30L) | (4–M12X30L) |
| D9 | M4X0.7P | M5*0.8P*18L | M6*1.25P*19L | M12*1.75P*28L | M16X2.0P | M20X2.5P | M20X2.5P |
| L1 | 19 | 28.5 | 36.5 | 51 | 79 | 82 | 105 |
| L2 | 5.5 | 7 | 10 | 12 | 15 | 20 | 30 |
| L3 | 4 | 6 | 8 | 10 | 12 | 15 | 20 |
| L4 | 26 | 37 | 48 | 65 | 97 | 105 | 138 |
| L5 | 113 | 115 | 130.5 | 167.5 | 282 | 322 | 383 |
| L6 | 139 | 182 | 208.5 | 277.5 | (378) | (427) | (521) |
| L7 | (3.5) | (5) | (6.5) | (10) | (14) | (15) | (7) |
| L8 | (30) | (33) | (42.5) | (59) | (81) | (85) | (85) |
| L9 | (69.5) | (77.5) | (87) | (120) | (165) | (213.5) | (268.5) |
| L10 | (90.5) | (111.75) | (134) | (179.5) | (236) | (303.5) | (378.5) |
| C1 | □42 | □60 | □90 | □115 | □142 | □180 | □220 |
| C2 | (□42) | (□60) | (□80) | (□130) | (□142) | (□180) | (□220) |
| S1 | 2 | 3 | 4 | 5 | 5 | 5 | 7 |
| S2 | 16 | 22 | 28 | 40 | 65 | 70 | 90 |
| S3 | 15 | 18 | 24.5 | 35 | 43 | 59 | 79 |
| B | 5 | 5 | 6 | 10 | 12 | 16 | 20 |
| K1 | – | 3 | 6 | 8 | 10 | 14 | 16 |
| K2 | – | ϕ8 | ϕ18 | ϕ28 | ϕ38 | ϕ50 | ϕ60 |
| K3 | – | 9.2 | 21 | 31.3 | 42 | 53.8 | 64.4 |
| K4 | – | ϕ11 | ϕ24 | ϕ38 | ϕ48 | ϕ60 | ϕ72 |
| K5 | – | 20 | 30 | 27 | 35 | 43 | 60 |
| K6 | – | 24 | 35 | 32 | 40 | 50 | 65 |

注1：（ ）括號內爲可選擇範圍尺寸，（ ）括號外爲標準尺寸。
注2：減速機出力軸可以爲客户定制大小和長短。
注3：輸入尺寸依據各品牌伺服馬達或步進馬達可以有所變動。

Note 1：Inside of () is the optional range of sizes, outside of () is the standard sizes.
Note 2: The reducer output shaft size and length can be customized for customers.
Note 3: The input size can be changed according to the servomotor or stepper motor of each brand.