Open circular guide shaft support ▶ Compact Type Standard Type / Long Guide Type

Please order according to the diagram

❶~❷ Select the type and parameters in the order of for ordering

Model (❶Code)	–	❷DH7
HQASH	–	D8

Price Excluding Tax (Yuan)

Discounted Price

Quantity	1~9	10~
Price	100%	Separate Quotation

Custom-made / Inventory

CAD 2D 3D

Compact Type		Material		Surface Treatment	Accessories (1PCS)
Standard Type	Long Guide Type	International	Equivalent		
HQASH	HQARH	45	S45C	Black Oxide Finish	Hexagon Socket Head Cap Screw
HQASE	HQARE			Electroless Nickel Plating	Hexagon Socket Head Cap Screw (Stainless Steel)
HQASU	HQARU	0Cr18Ni9	SUS304	—	

Features: The support has a small outer diameter (Dimension H), suitable for space-saving.

Standard Type

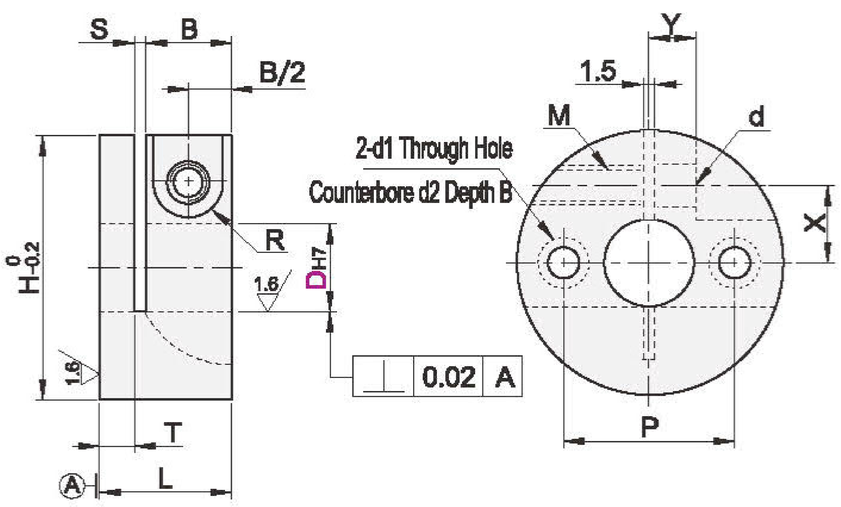

Long Guide Type

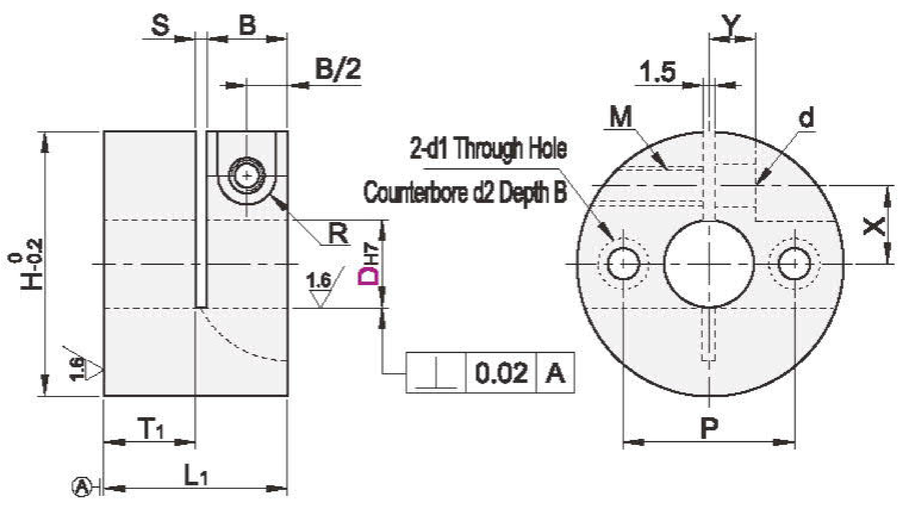

Model ❶Code	❷DH7		L	L1	H	B	T	T1	P	d1	d2	S	X	Y	M	d	R
Standard Type / Long Guide Type	(8)	+0.015 0	16	–	30	11	3.5	–	20	4.5	7.8	1.5	9.5	4.8	5	5.5	4.5
HQASH / HQARH	(10)		17	25	34		4.5	12.5	22	5.5	9.3		10	5.8			
HQASE / HQARE	12	+0.018 0			36				25				12				
HQASU / HQARU	15			28	38			15.5	26				13				
	16		22	30	39	14	6	14	28	6.6	10.8	2	13.5	6.8	6	6.6	6
	20	+0.021 0		34	49			18	35				16	7.8			
	25			38	54			22	40				19				
	30		24	40	59		8	24	45				22				

The specifications within () are not applicable to the long guide type HQARH/RE/RU.