T-shaped Guide Shaft Support ▸ Standard type•Without Positioning Hole / With Positioning Hole

Regular type

Please order according to the diagram

❶~❸ Select the type and parameters in the order of for ordering

Model (❶Code)	–	❷DH7	–	❸H
HTASH	–	D6	–	H10

Price Excluding Tax (Yuan)

Discounted Price

Quantity	1~9	10~
Price	100%	Separate Quotation

Custom-made / Inventory

Code	Type			Material International	Material Equivalent	Surface Treatment	Accessories
HTASH	Regular type	Without Positioning Hole	H Optional Type	45	S45C	Black Oxide Finish	1 Set Screw Lock
HTASE						Electroless Nickel Plating	1 Set Screw Lock (Stainless Steel)
HTASU				0Cr18Ni9	SUS304	—	
HTASY				LD31	A6063	Natural Anodizing	
HTARH			H Specified Type	45	S45C	Black Oxide Finish	1 Set Screw Lock
HTARE						Electroless Nickel Plating	1 Set Screw Lock (Stainless Steel)
HTARU				0Cr18Ni9	SUS304	—	
HTARY				LD31	A6063	Natural Anodizing	
HTATH		With Positioning Hole	H Optional Type	45	S45C	Black Oxide Finish	1 Set Screw Lock
HTATE						Electroless Nickel Plating	1 Set Screw Lock (Stainless Steel)
HTATU				0Cr18Ni9	SUS304	—	

Without Positioning Hole

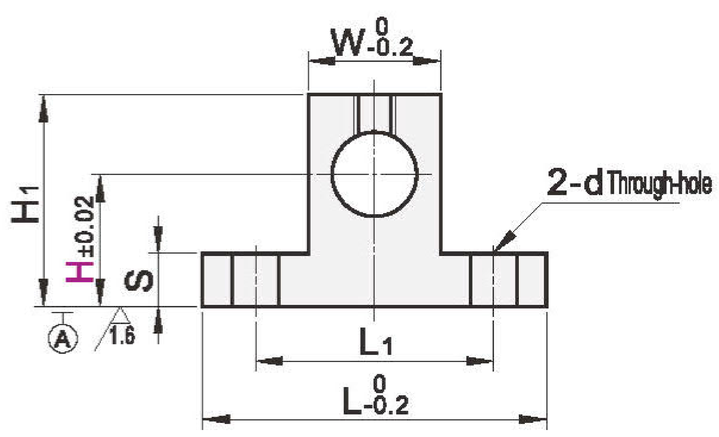

With Positioning Hole

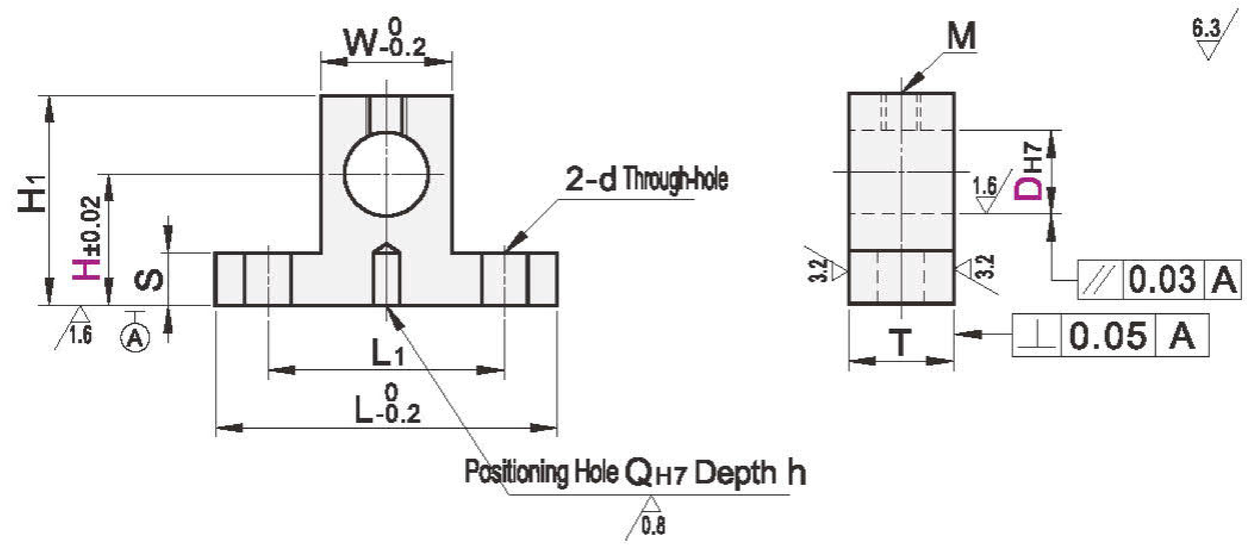

Example

Assembly Diagram

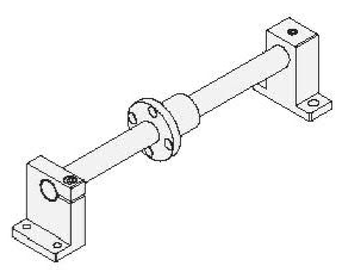

Disassembly Diagram

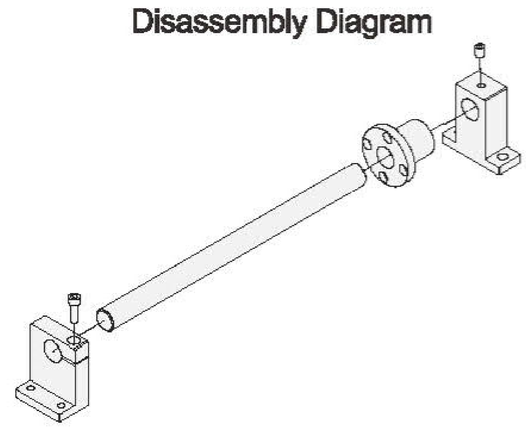

Model ❶Code	❷DH7		❸H Optional Type	❸H Specified Type Minimum Unit 0.1	L	H1	T	S	W	M	L1	d	Q	h
Without Positioning Hole HTASH HTASE HTASU HTASY HTARH HTARE HTARU HTARY	3	+0.010 0	10 15 20 25	10.0~20.0	26	H+5	8	3.8	9.8	M3	18	3.5	—	—
	4					H+6								
	5	+0.012 0	10 15 20 25 30	15.0~25.0		H+7								
	6					H+8								
	8	+0.015 0	(10) 15 20 25 30 40	10.0~40.0	42	H+9	10	5.8	17.8	M4	30	4.5	4	5
	10		(10) 15 20 25 30 40 50	15.0~40.0		H+10								
	12	+0.018 0				H+11								
	13					H+12								
	15		15 20 25 30 40 50	15.0~40.0	54	H+15			29.8		42			
	16													
With Positioning Hole HTATH HTATE HTATU	18		(15) 20 25 30 40 50 60	25.0~60.0	67	H+18	16	7.8	34.8	M6	50	6.6	5	7
	20	+0.021 0	(15) 20 25 30 40 50 60	20.0~60.0										
	25		20 25 30 40 50 60 80	25.0~60.0		H+20								
	30				85	H+23	20	9.8	44.8		65	9		
	35	+0.025 0	(25) 30 40 50 60 80	30.0~60.0		H+25								
	40		(25) 30 40 50 60 80	30.0~80.0	100	H+30			59.8		80			
	50		(30) 40 50 60 80	40.0~80.0	125	H+38		14.8	74.8		100	14		

! Through-hole for the M bottom hole corresponding to the H dimension with ()