T-shaped Guide Shaft Support ▶ Open Type•Without Positioning Hole Side Opening•Type Regular type

Please order according to the diagram

❶~❸ Select the type and parameters in the order of for ordering

Open Type

Model (❶Code)	–	❷DH7	–	❸H
HTBSH	–	D8	–	H10

Discounted Price

Quantity	1~9	10~
Price	100%	Separate Quotation

Price Excluding Tax (Yuan)

Open Type

Custom-made / Inventory

Code		Material		Surface Treatment	Accessories
Without Positioning Hole		International	Equivalent		
H Optional Type	H Specified Type				
HTBSH	HTBRH	45	S45C	Black Oxide Finish	1 Set Hexagon Socket Head Cap Screw
HTBSE	HTBRE			Electroless Nickel Plating	1 Set Hexagon Socket Head Cap Screw (Stainless Steel)
HTBSU	HTBRU	0Cr18Ni9	SUS304	—	
HTBSY	HTBRY	LD31	A6063	Natural Anodizing	
HTBSZ	HTBRZ			Black Anodizing	1 Set Hexagon Socket Head Cap Screw

Without Positioning Hole

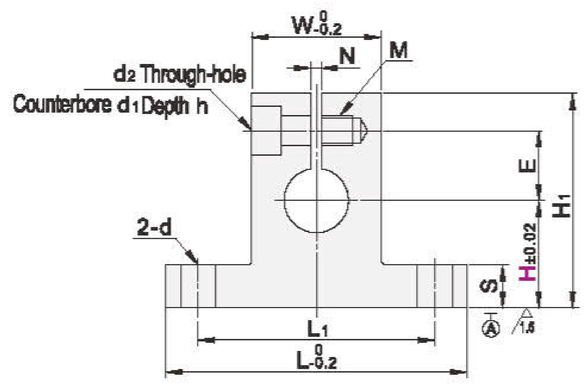

Model ❶Code	❷DH7		❸H Optional Type	❸H Specified Type Minimum Unit 0.1	L	H1	T	S	W	L1	d	E	M	d2	d1	h	N	Q	V
Without Positioning Hole HTBSH HTBSE HTBSU HTBSY HTBSZ HTBRH HTBRE HTBRU HTBRY HTBRZ	3	+0.010 0	10 15 20	10.0~20.0	26	H+11	8	3.8	9.8	18	3.5	7	M3 Through-hole	3.5	6.5	3.5	1.5	—	—
	4																		
	5	+0.012 0	10 15 20 25	10.0~25.0		H+12						8							
	6																		
	8	+0.015 0	(10) 15 20 25 30 40	10.0~40.0	42	H+16	10	5.8	17.8	30	4.5	11	M4 Through-hole	4.5	8	4.5	2	4	5
	10		(10) 15 20 25 30 40																
	12	+0.018 0				H+18						13							
	13		15 20 25 30 40	15.0~40.0															
	15				54	H+20			29.8	42		15	M4 Depth 8						
	16		15 20 25 30 40 50																
	18		20 25 30 40 50 60	20.0~60.0	67	H+26	16	7.8	34.8	50	6.6	18	M6 Through-hole	6.6	11	6.5		5	7
	20																		

H Dimension with () is not applicable to the type with positioning hole

Side Opening Type

Custom-made / Inventory

Code	Type		Material International	Material Equivalent	Surface Treatment	Accessories
HTDSH	Side Opening Type	H Optional Type	45	S45C	Black Oxide Finish	1 Set Hexagon Socket Head Cap Screw
HTDSE					Electroless Nickel Plating	1 Set Hexagon Socket Head Cap Screw (Stainless Steel)
HTDSU			0Cr18Ni9	SUS304	—	
HTDSY			LD31	A6063	Natural Anodizing	

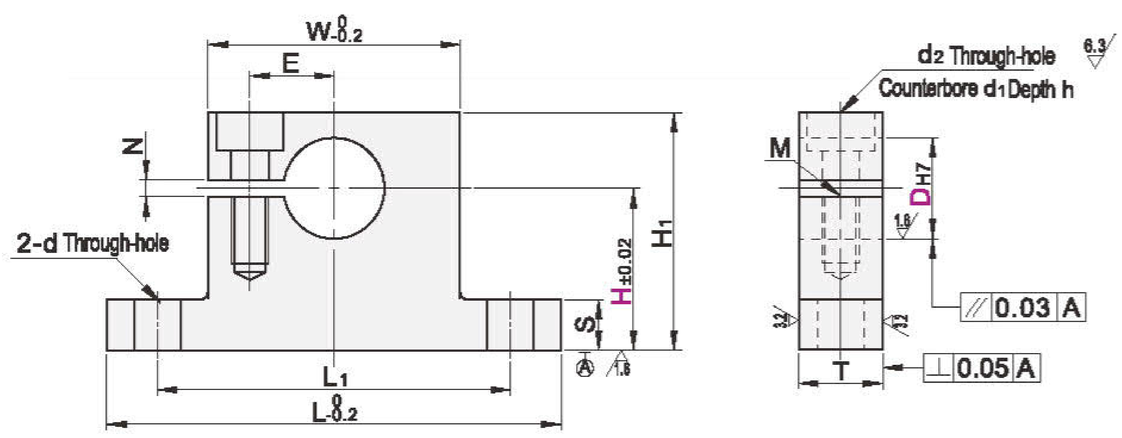

Model ❶Code	❷DH7		❸H Optional Type	L	H1	T	S	W	L1	d	E	M	d2	d1	h	N
H Optional Type HTDSH HTDSE HTDSU HTDSY	8	+0.015 0	(10) (15) 20 25 30 40	44	H+7	12	5.8	27.8	36	4.5	9	M4 Depth 8	4.5	8	4.5	2
	10		(10) (15) 20 25 30 40	50	H+9			31.8	41		11					
	12	+0.018 0			H+10											
	13		(15) 20 25 30 40		H+11											
	16		(15) 20 25 30 40		H+12											
	20	+0.021 0	(20) 25 30 40 50 60	75	H+15	16	7.8	47.8	62	6.5	17	M6 Depth 12	6.6	11	6.5	
	25		(20) 25 30 40 50 60		H+18											
	30		(25) 30 40 50 60	94	H+21	20	9.8	59.8	78	9	21	M8 Depth 16	9	14	9	3
	35	+0.025 0		98	H+24			63.8	82		23					
	40		30 40 50 60 80	103	H+27			69.8	87		26					

Through-hole for the M bottom hole corresponding to the H dimension with ()