Thickened T-shaped Guide Shaft Support ▶ Standard type/Open Type

Please order according to the diagram

❶~❸ Select the type and parameters in the order of for ordering

■ Standard type

Model (❶Code)	–	❷DH7	–	❸H
HTFRH	–	D8	–	H10

Discounted Price

Quantity	1~9	10~
Price	100%	Separate Quotation

Price Excluding Tax (Yuan)

■ Standard type

Custom-made / Inventory

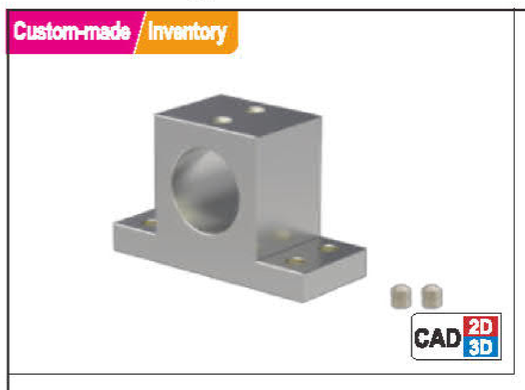

Code	Type	Material International	Material Equivalent	Surface Treatment	Accessories
HTFRH	Standard type	45	S45C	Black Oxide Finish	1 Set Screw Lock
HTFRE				Electroless Nickel Plating	1 Set Screw Lock (Stainless Steel)
HTFRU		0Cr18Ni9	SUS304	—	

D30~50 With 2 Accessory Set Screws

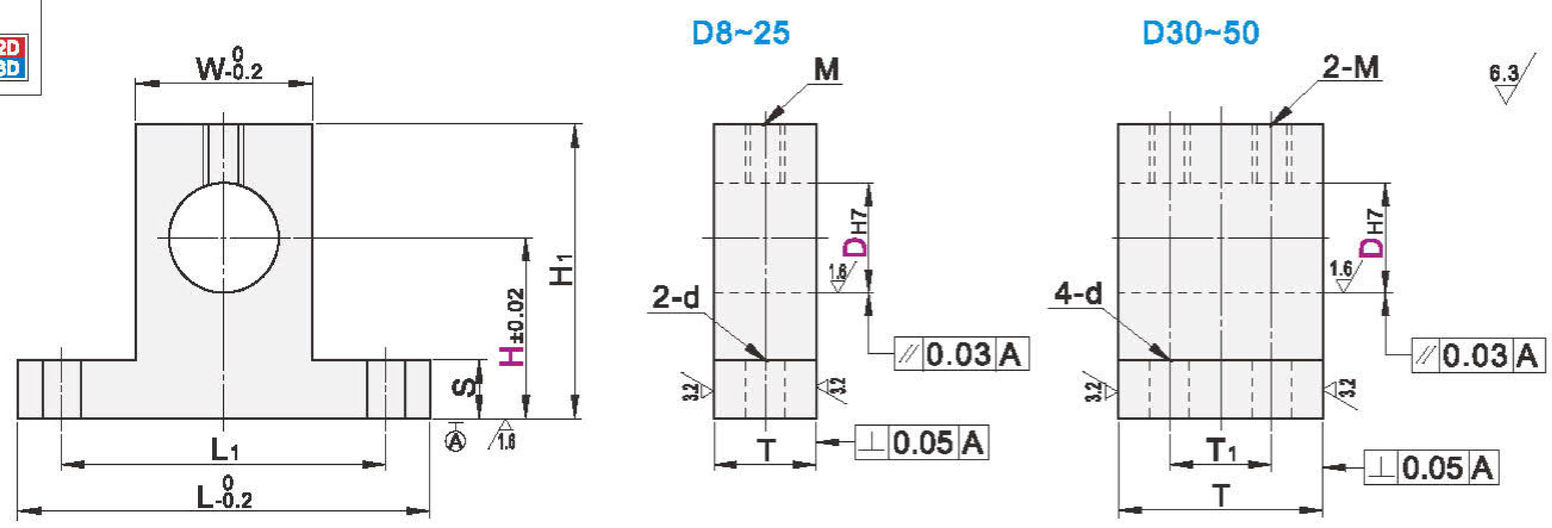

Model ❶Code	❷DH7		❸H	L	H1	T	T1	S	W	M	L1	d
HTFRH HTFRE HTFRU	8	+0.015 0	10 15 20 25 30 40	42	H+9	15	7.5	5.8	17.8	M6	30	6.6
	10		10 15 20 25 30 40 50 60		H+10							
	12	+0.018 0	10 15 20 25 30 40 50 60		H+11	18	9					
	13		15 20 25 30 40 50 60		H+12							
	15		15 20 25 30 40 50 60	54	H+15	20	10		28.8		42	
	16		15 20 25 30 40 50 60 80									
	20	+0.021 0	20 25 30 40 50 60 80	67	H+18	25	12.5	7.8	33.8		50	9
	25		20 25 30 40 50 60 80		H+20	30	15					
	30		25 30 40 50 60 80	85	H+23	35	17.5	9.8	43.8	M8	65	6.6
	35		25 30 40 50 60 80		H+25							
	40	+0.025 0	30 40 50 60 80	100	H+30	40	20		57.8		80	9
	50		40 50 60 80	125	H+38	50	25	14.8	73.8		100	11

■ Open Type

Custom-made / Inventory

Code	Type	Material International	Material Equivalent	Surface Treatment	Accessories
HTHSH	Open Type	45	S45C	Black Oxide Finish	1 Set Hexagon Socket Head Cap Screw
HTHSE				Electroless Nickel Plating	1 Set Hexagon Socket Head Cap Screw (Stainless Steel)
HTHSU		0Cr18Ni9	SUS304	—	
HTHSY		LF2	A5052	Natural Anodizing	

D30~50 With 2 Accessory Hexagon Socket Head Cap Screws

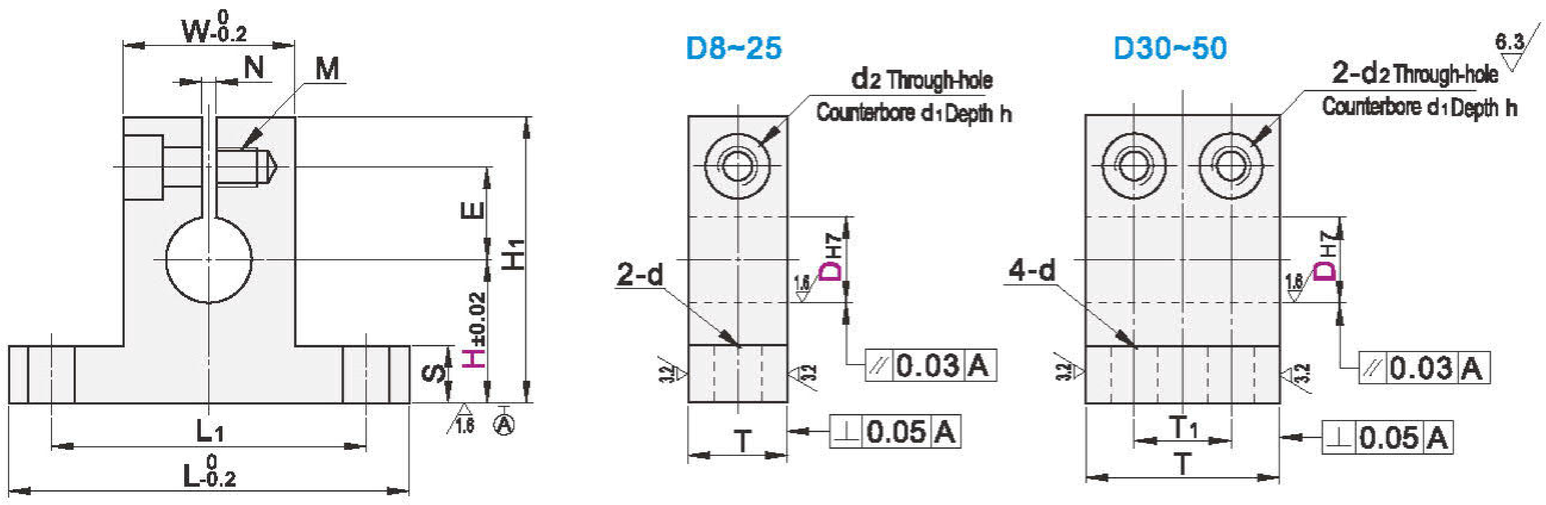

Model ❶Code			❸H	L	H1	T	T1	S	W	L1	d	E	M	d2	d1	h	N
HTHSH HTHSE HTHSU HTHSY	8	+0.015 0	10 15 20 25 30 40	48	H+18	15	7.5	5.8	23.8	36	6.6	11	M6 Through-hole	7	11	7	2
	10		10 15 20 25 30 40 50 60		H+19							12					
	12	+0.018 0	10 15 20 25 30 40 50 60		H+21	18	9					14					
	13		15 20 25 30 40 50 60														
	15		15 20 25 30 40 50 60	54	H+23	20	10		29.8	42		16					
	16		15 20 25 30 40 50 60														
	20	+0.021 0	20 25 30 40 50 60 80	67	H+29	25	12.5	7.8	34.8	50	9	19	M8 Through-hole	9	14	9	
	25		20 25 30 40 50 60 80		H+31	30	15					22					
	30		25 30 40 50 60 80	85	H+33	35	17.5	9.8	44.8	65	6.6	24					3
	35		25 30 40 50 60 80		H+36							27					
	40	+0.025 0	30 40 50 60 80	100	H+38	40	20		59.8	80	9	29	M8 Depth 16				
	50		40 50 60 80	125	H+51	50	25	14.8	74.8	100	11	38	M12 Depth 25	14	20	13	