Flanged Guide Shaft Support ▸ Standard type / Extended Type
Mounting Hole Through-hole

Please order according to the diagram

❶~❷ Select the type and parameters in the order of for ordering

■ Standard type•Mounting Hole Through-hole

Model (❶Code)	—	❷DH7
HWBSH	—	D8

Discounted Price

Quantity	1~9	10~
Price	100%	Separate Quotation

Price Excluding Tax (Yuan)

■ Standard type•Mounting Hole Through-hole

Custom-made / Inventory

Code	Type			Material International	Material Equivalent	Surface Treatment
HWBSH	Standard type	Mounting Hole Through-hole	Round Flange Type	45	S45C	Black Oxide Finish
HWBSE						Electroless Nickel Plating
HWBSU				0Cr18Ni9	SUS304	—
HWBSY				LD30	A6061	Natural Anodizing
HWBSZ						Black Anodizing
HWBRH			Square Flange Type	45	S45C	Black Oxide Finish
HWBRE						Electroless Nickel Plating
HWBRU				0Cr18Ni9	SUS304	—
HWBRY				LD30	A6061	Natural Anodizing
HWBRZ						Black Anodizing
HWBTH			Opposite Edge Flange Type	45	S45C	Black Oxide Finish
HWBTE						Electroless Nickel Plating
HWBTU				0Cr18Ni9	SUS304	—
HWBTY				LD30	A6061	Natural Anodizing
HWBTZ						Black Anodizing

Round Flange Type

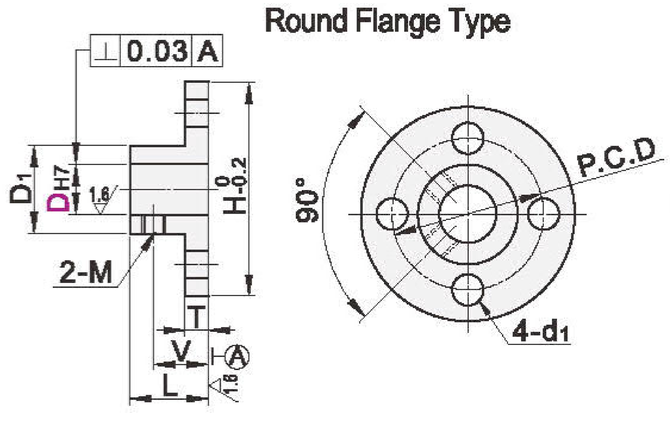

Square Flange Type

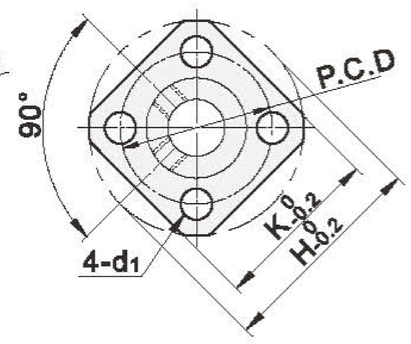

Opposite Edge Flange Type

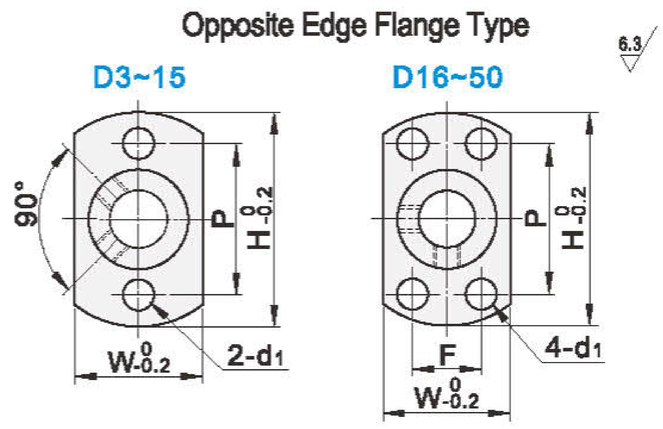

Model ❶Code		❷DH7	L	D1	H	T	V	P.C.D	K	W	P	F	d1	M
Round Flange Type	3	+0.010 0	10	7.8	22	3	8	15	16	8	15	—	3.5	M3
	4			8.8	24			17	19	9	17			
HWBSH	5	+0.012 0	12	9.8	25	3.5		18	20	10	18			
HWBSE	6		15							12				
HWBSU	8	+0.015 0	16	11.8	28	5	11	20	22	16	20		4.5	M4
HWBSY	8M													
HWBSZ	10		20	13.8	30		13	22	23	18	22		3.5	M3
Square Flange Type	10M													
HWBRH	12	+0.018 0	24	15.8	36	6	16	26	28	20	26		4.5	M4
HWBRE	13			17.8	38			28	30	22	28			
HWBRU	15		30	19.8	40		19	30	32	24	30			
HWBRY	16		32	21.8	42		20	32	33	26	28	16		
HWBRZ	18			27.8	50	8	21	39	39	32	31	22	5.5	M5
Opposite Edge Flange Type	20													
HWBTH	25	+0.021 0	38	32.8	55		24	44	44	37	36	24		
HWBTE	30			37.8	66		25	52	52	42	41	27	6.6	
HWBTU	35	+0.025 0	50	44.8	80	10	32	65	65	55	56	33	9.0	M6
HWBTY	40			59.8	90			75	75	65	65	38		
HWBTZ	50			69.8	100			85	90	75	74	43		

■ Extended Type•Mounting Hole Through-hole

Custom-made / Inventory

Code	Type			Material International	Material Equivalent	Surface Treatment
HWCSH	Extended Type	Mounting Hole Through-hole	Round Flange Type	45	S45C	Black Oxide Finish
HWCSE						Electroless Nickel Plating
HWCSU				0Cr18Ni9	SUS304	—
HWCRH			Square Flange Type	45	S45C	Black Oxide Finish
HWCRE						Electroless Nickel Plating
HWCRT				0Cr18Ni9	SUS304	—
HWCTH			Opposite Edge Flange Type	45	S45C	Black Oxide Finish
HWCTE						Electroless Nickel Plating
HWCTU				0Cr18Ni9	SUS304	—

Round Flange Type

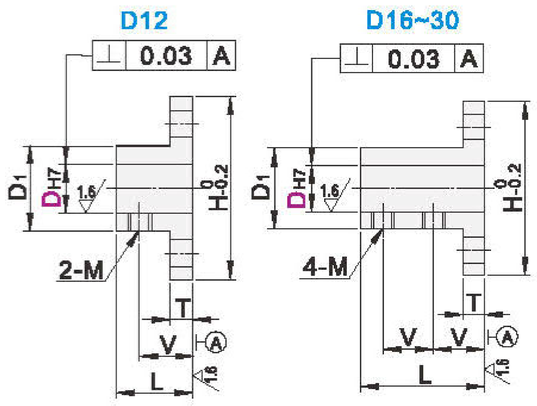

Square Flange Type

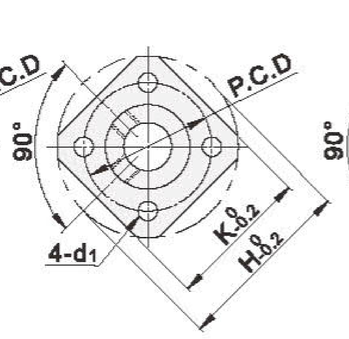

Opposite Edge Flange Type

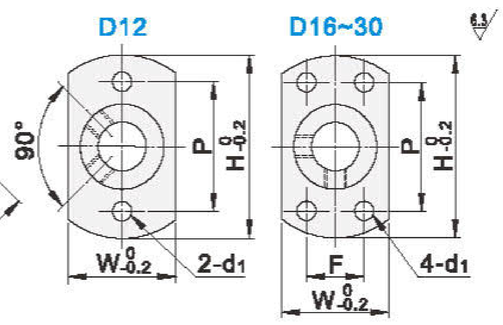

Model ❶Code			❷DH7		L	D1	H	T	V	P.C.D	K	W	P	F	d1	M
Round Flange Type	Square Flange Type	Opposite Edge Flange Type	12	+0.018 0	30	15.8	36	6	16	26	28	20	26	—	4.5	M4
HWCSH	HWCRH	HWCTH	16		48	21.8	42		17	32	33	26	28	16		
HWCSE	HWCRE	HWCTE	20	+0.021 0		27.8	50	8		39	39	32	31	22	5.5	M5
HWCSU	HWCRT	HWCTU	25		57	32.8	55		20	44	44	37	36	24		
			30			37.8	66	10		52	52	42	41	27	6.6	M6

www.fh-fa.com ⋙ Self-service selection / Free 2D-3D drawing downloads

Reduce purchasing costs! Reduce design time by more than 60%!