Flanged Guide Shaft Support ▶ Guidance Type•Mounting Hole Through-hole

Please order according to the diagram

❶~❷ Select the type and parameters in the order of for ordering

Model (❶Code)	—	❷DH7
HWDSH	—	D8

Price Excluding Tax (Yuan)

Discounted Price

Quantity	1~9	10~
Price	100%	Separate Quotation

Custom-made / Inventory

Code	Type			Material International	Material Equivalent	Surface Treatment
HWDSH	Guidance Type	Mounting Hole Through-hole	Round Flange Type	45	S45C	Black Oxide Finish
HWDSE						Electroless Nickel Plating
HWDSU				0Cr18Ni9	SUS304	—
HWDRH			Square Flange Type	45	S45C	Black Oxide Finish
HWDRE						Electroless Nickel Plating
HWDRU				0Cr18Ni9	SUS304	—
HWDTH			Opposite Edge Flange Type	45	S45C	Black Oxide Finish
HWDTE						Electroless Nickel Plating
HWDTU				0Cr18Ni9	SUS304	—

Round Flange Type

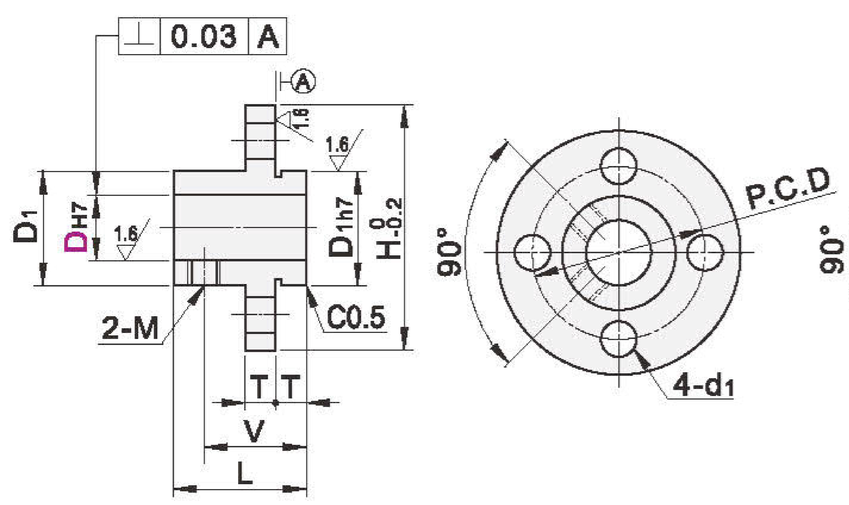

Square Flange Type

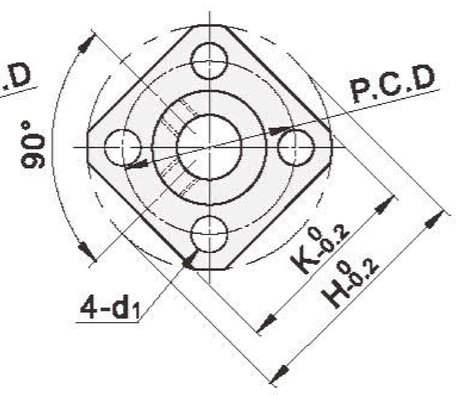

Opposite Edge Flange Type

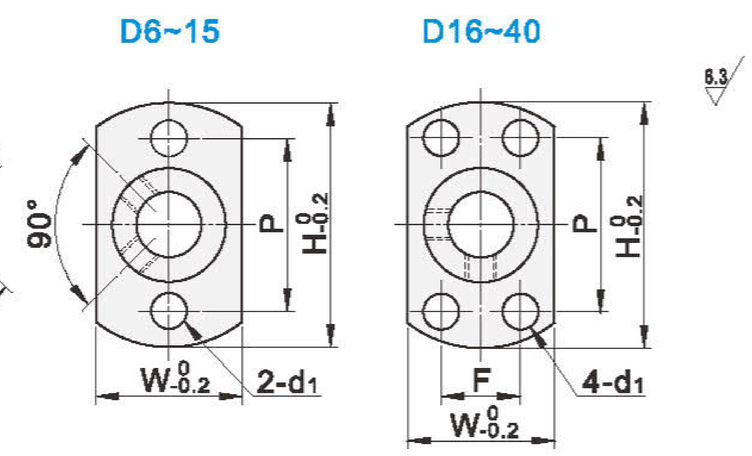

Model ❶Code			DH7		L	D1	H	T	V	M	P.C.D	K	W	P	F	d1
Round Flange Type	Square Flange Type	Opposite Edge Flange Type	6	+0.012 0	15	12	28	3.5	12	M3	20	22	12	20	—	3.5
			8	+0.015 0	18			5	15				16			
			8M							M4						4.5
			10		20	14	30		16	M3	22	23	18	22		3.5
			10M													
HWDSH	HWDRH	HWDTH	12	+0.018 0	24	16	36	6	19	M4	26	28	20	26		4.5
HWDSE	HWDRE	HWDTE	15		30	20	40		22		30	32	24	30		
HWDSU	HWDRU	HWDTU	16		32	22	42		23		32	33	26	28	16	
			20	+0.021 0		28	50	8	25	M5	39	39	32	31	22	5.5
			25		38	33	55		29		44	44	37	36	24	
			30			38	66	10	30	M6	52	52	42	41	27	6.6
			40	+0.025 0	50	60	90		35		75	75	65	65	38	9