Flanged Guide Shaft Support ▸ Type with Positioning Hole / End Face Fixing Type

Mounting Hole Through-hole

Please order according to the diagram

❶~❷ Select the type and parameters in the order of for ordering

Type with Positioning Hole•Mounting Hole Through-hole

Model (❶Code)	—	❷DH7
HWFSH	—	D12

Price Excluding Tax (Yuan)

Discounted Price

Quantity	1~9	10~
Price	100%	Separate Quotation

Type with Positioning Hole•Mounting Hole Through-hole

Custom-made / Inventory

Code	Type			Material International	Material Equivalent	Surface Treatment
HWFSH	Type with Positioning Hole	Mounting Hole Through-hole	Round Flange Type	45	S45C	Black Oxide Finish
HWFSE						Electroless Nickel Plating
HWFSU				0Cr18Ni9	SUS304	—
HWFTH			Opposite Edge Flange Type	45	S45C	Black Oxide Finish
HWFTE						Electroless Nickel Plating
HWFTU				0Cr18Ni9	SUS304	—

Round Flange Type

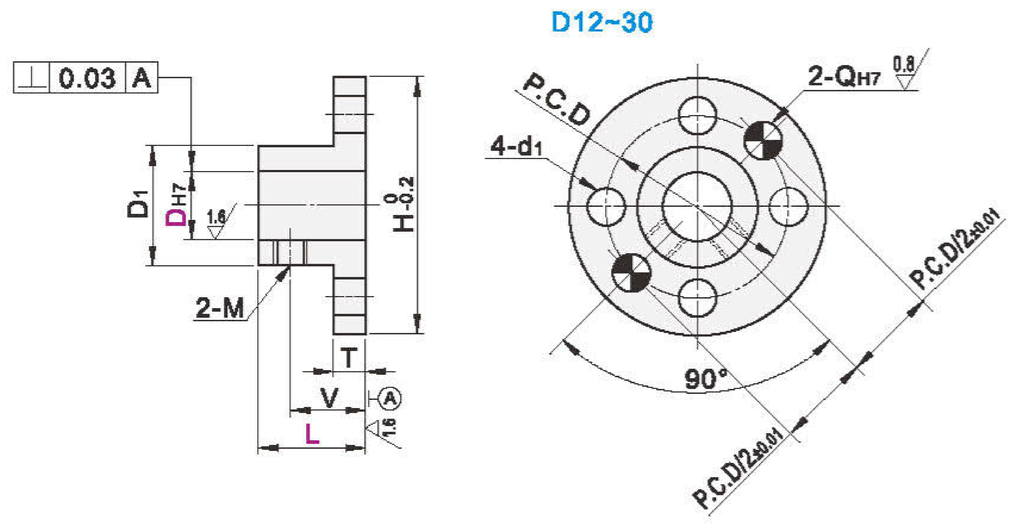

Opposite Edge Flange Type

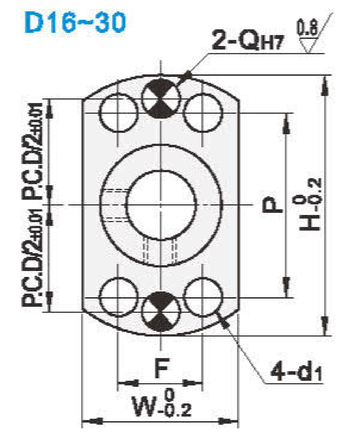

Model ❶Code		❷DH7		L	D1	H	T	V	M	P.C.D	Q	W	P	F	d1
Round Flange Type	Opposite Edge Flange Type	12	+0.018 0	24	15.8	36	6	16	M4	26	4	—	28	—	4.5
		13			17.8	38				28					
		15		30	19.8	40		19		30			30		
HWFSH	HWFTH	(16)		32	21.8	42		20		32	5	26	28	16	5.5
HWFSE	HWFTE	(18)			27.8	50	8	21	M5	39		32	31	22	
HWFSU	HWFTU	(20)	+0.021 0								6				6.6
		(25)		38	32.8	55		24		44		37	36	24	
		(30)			37.8	66	10	25	M6	52		42	41	27	

(1) HWFSH/SE/SU对边法兰型仅适用带( )规格。

End Face Fixing Type•Mounting Hole Through-hole

Custom-made / Inventory

Code	Type			Material International	Material Equivalent	Surface Treatment
HWGSH	End Face Fixing Type	Mounting Hole Through-hole	Round Flange Type	45	S45C	Black Oxide Finish
HWGSE						Electroless Nickel Plating
HWGSU				0Cr18Ni9	SUS304	—
HWGRH			Square Flange Type	45	S45C	Black Oxide Finish
HWGRE						Electroless Nickel Plating
HWGRU				0Cr18Ni9	SUS304	—
HWGTH			Opposite Edge Flange Type	45	S45C	Black Oxide Finish
HWGTE						Electroless Nickel Plating
HWGTU				0Cr18Ni9	SUS304	—

Round Flange Type

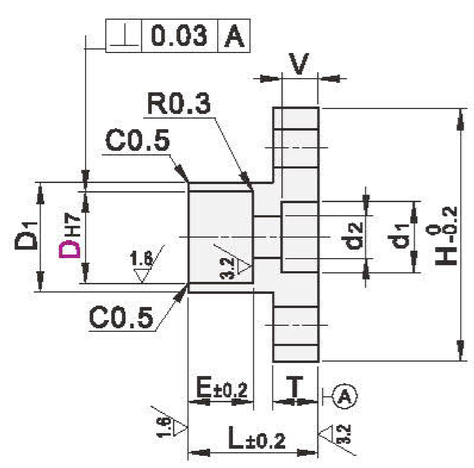

Square Flange Type

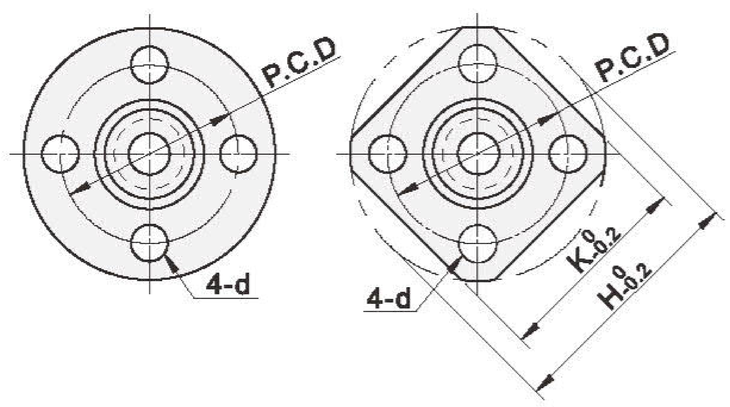

Opposite Edge Flange Type

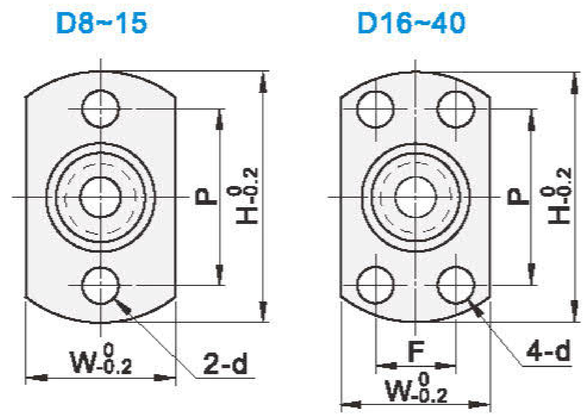

Model ❶Code			❷DH7		L	D1	H	T	V	E	P.C.D	K	W	P	F	d	d1	d2	Accessory Screws
Round Flange Type	Square Flange Type	Opposite Edge Flange Type	8	+0.015 0	16	11.8	28	5	4.5	10	20	23	16	20	—	3.5	8	4.5	M4
			10		20	13.8	30		5.5	12	22	24	18	22		4.5	9.5	5.5	M5
			12	+0.018 0	24	15.8	36	6	6.5	15	26	29	20	28			11	6.6	M6
			15		30	19.8	40		9	15	30	33	24	30			14	9	M8
HWGSH	HWGRH	HWGTH	16		32	21.8	42			16	32	34	26	28	16				
HWGSE	HWGRE	HWGTE	20	+0.021 0	38	27.8	50	8	11	18	39	40	32	31	22	5.5	18	11	M10
HWGSU	HWGRU	HWGTU	25		46	32.8	55		13	23	44	45	37	36	24		20	13	M12
			30		58	37.8	66	10	17	28	52	54	42	41	27	6.6	26	17	M16
			40	+0.025 0	70	53.8	88			38	72	74	62	62	38	9			