Open Flange Type Guide Shaft Support ▸ Standard type / Extended Type
Mounting Hole Through-hole

Please order according to the diagram

❶~❷ Select the type and parameters in the order of for ordering

Standard type•Mounting Hole Through-hole

Model (❶Code)	–	❷DH7
HXASH	–	D8

Discounted Price

Quantity	1~9	10~
Price	100%	Separate Quotation

Price Excluding Tax (Yuan)

Standard type•Mounting Hole Through-hole

Custom-made / Inventory

Code	Type			Material International	Material Equivalent	Surface Treatment
HXASH	Standard type	Mounting Hole Through-hole	Round Flange Type	45	S45C	Black Oxide Finish
HXASE						Electroless Nickel Plating
HXASU				0Cr18Ni9	SUS304	—
HXARH			Square Flange Type	45	S45C	Black Oxide Finish
HXARE						Electroless Nickel Plating
HXARU				0Cr18Ni9	SUS304	—
HXATH			Opposite Edge Flange Type	45	S45C	Black Oxide Finish
HXATE						Electroless Nickel Plating
HXATU				0Cr18Ni9	SUS304	—

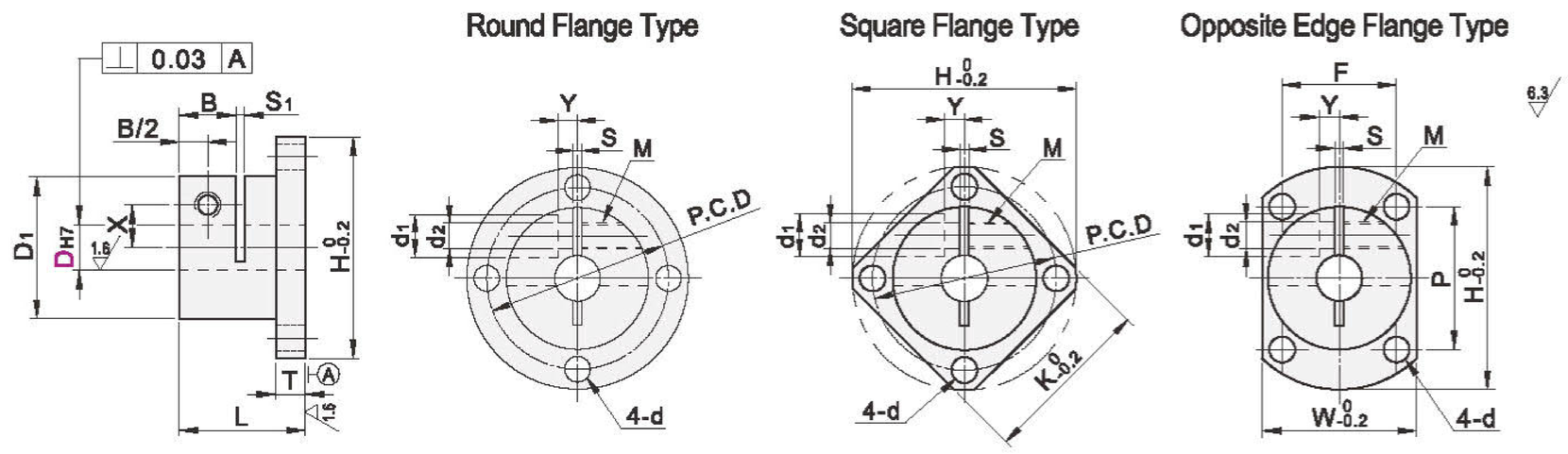

Model ❶Code	❷DH7		L	D1	H	T	B	P.C.D	K	W	P	F	d	S	S1	X	Y	d1	d2	M	Accessory Screws
Round Flange Type HXASH	8	+0.015 0	18	24.8	39	4.8	10	32	30	27	25	20	3.5	1.5	1.5	7.5	3.5	7.5	4.6	M4	M4×10
	8M																				
HXASE	10		20	29.8	49			40	38	32	33	23	4.5			10	3	9	5.6	M5	M5×10
HXASU	12	+0.018 0	22	31.8	52	5.8		42	40	34	35	25				11	4				M5×12
Square Flange Type HXARH	13		24				12														
	15		27	34.8	56			46	44	37	37	27	5.5			12	5				
HXARE	16		30																		
HXARU	20	+0.021 0	32	39.8	64	7.8		52	50	42	43	30	6.6		2	14	6				M5×16
Opposite Edge Flange Type HXATH	25		38	44.8	69		15	57	54	47	46	34				17					
	30		40	54.8	79	9.8		67	60	57	50	45				20	10	12	6.6	M6	M6×20
HXATE	35	+0.025 0	48	59.8	94			77	71	66	58	50	9			23	12				
HXATU	40		55	69.8	104	11.8	18	87	81	76	67	55				26	13	14	9	M8	M8×25
	50		65	84.8	119		22	102	94	91	82	60				32	16	18	11	M10	M10×35

Extended Type•Mounting Hole Through-hole

Custom-made / Inventory

Code	Type			Material International	Material Equivalent	Surface Treatment
HXBSH	Extended Type	Mounting Hole Through-hole	Round Flange Type	45	S45C	Black Oxide Finish
HXBSE						Electroless Nickel Plating
HXBSU				0Cr18Ni9	SUS304	—
HXBRH			Square Flange Type	45	S45C	Black Oxide Finish
HXBRE						Electroless Nickel Plating
HXBRU				0Cr18Ni9	SUS304	—
HXBTH			Opposite Edge Flange Type	45	S45C	Black Oxide Finish
HXBTE						Electroless Nickel Plating
HXBTU				0Cr18Ni9	SUS304	—

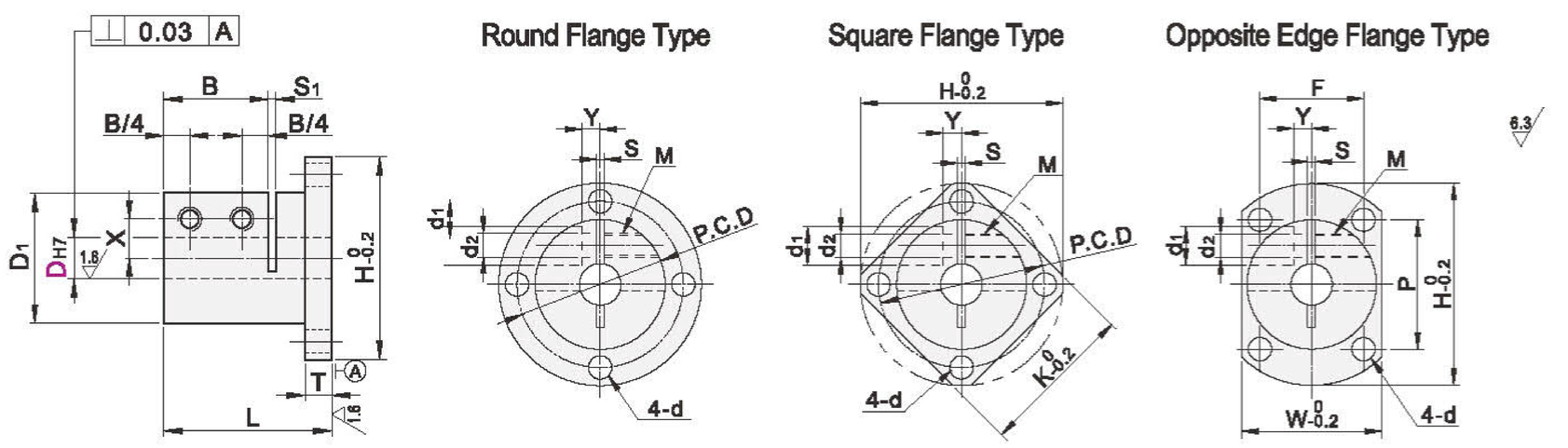

Model ❶Code	❷DH7		L	D1	H	T	B	P.C.D	K	W	P	F	d	S	S1	X	Y	d1	d2	M	Accessory Screws
Round Flange Type Square Flange Type Opposite Edge Flange Type HXBSH HXBRH HXBTH	12	+0.018 0	33	31.8	52	5.8	20	42	40	34	35	25	4.5	1.5	1.5	11	4	9	5.6	M5	M5×12
	16		45	34.8	56		24	46	44	37	37	27	5.5			12	5				
HXBSE HXBRE HXBTE	20	+0.021 0	48	39.8	64	7.8		52	50	42	43	30	6.6		2	14	6				M5×16
HXBSU HXBRU HXBTU	25		57	44.8	69		30	57	54	47	46	34				17					
	30		60	54.8	79	9.8		67	60	57	50	45				20	10	12	6.6	M6	M6×20
	35	+0.025 0	72	59.8	94			77	71	66	58	50	9.6			23	12				
	40		82.5	69.8	104	11.8	36	87	81	76	67	55				26	13	14	9	M8	M8×25
	50		97.5	84.8	119		44	102	94	91	82	60				32	16	18	11	M10	M10×35