Open Flange Type Guide Shaft Support ▸ Guidance Type / Type with Positioning Hole Mounting Hole Through-hole

Please order according to the diagram

❶~❷ Select the type and parameters in the order of for ordering

■ Guidance Type•Mounting Hole Through-hole

Model (❶Code)	—	❷DH7
HXCSH	—	D12

Price Excluding Tax (Yuan)

● Discounted Price

Quantity	1~9	10~
Price	100%	Separate Quotation

■ Guidance Type•Mounting Hole Through-hole

Custom-made / Inventory

Code	Type			Material International	Material Equivalent	Surface Treatment
HXCSH	Guidance Type	Mounting Hole Through-hole	Round Flange Type	45	S45C	Black Oxide Finish
HXCSE						Electroless Nickel Plating
HXCSU				0Cr18Ni9	SUS304	—
HXCTH			Opposite Edge Flange Type	45	S45C	Black Oxide Finish
HXCTE						Electroless Nickel Plating
HXCTU				0Cr18Ni9	SUS304	—

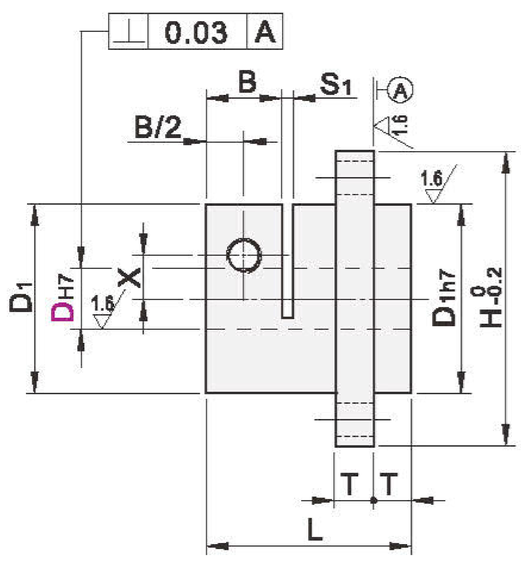

Round Flange Type

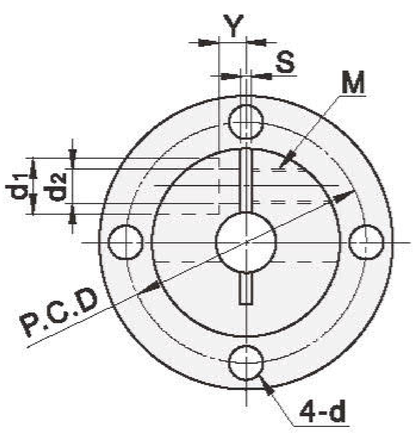

Opposite Edge Flange Type

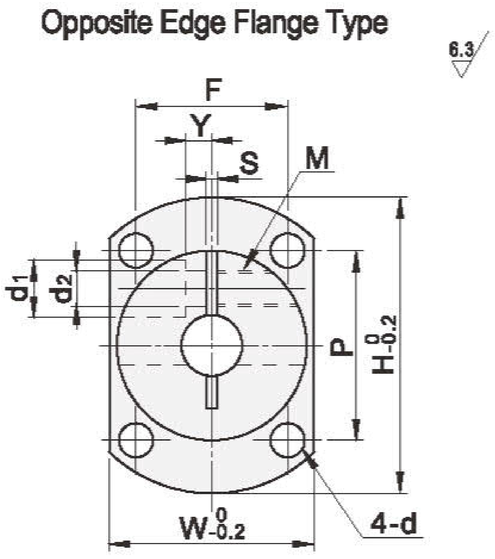

Model ❶Code		❷DH7		L	D1	H	T	B	P.C.D	W	P	F	d	S	S1	X	Y	d1	d2	M	Accessory Screws
Round Flange Type	Opposite Edge Flange Type	8	+0.015 0	23	25	39	5	10.2	32	27	25	20	3.5	1.5	1.5	7.5	3.5	7.5	4.6	M4	M4×10
		8M																			
HXCSH	HXCTH	10		25	30	49			40	32	33	23	4.5			10	3	9	5.6	M5	M5×10
HXCSE	HXCTE	12	+0.018 0	28	32	52	6		42	34	35	25				11	4				M5×12
HXCSU	HXCTU	15		33	35	56		12.2	46	37	37	27	5.5			12	5				
		16		36																	
		20		40	40	64	8		52	42	43	30	6.6		2	14	6				M5×16
		25	+0.021 0	46	45	69		15.2	57	47	46	34				17					
		30		50	55	79	10		67	57	50	45				20	10	12	6.6	M6	M6×20
		40	+0.025 0	67	70	104		18.2	87	76	67	55	9			26	13	14	9	M8	M8×25

■ Type with Positioning Hole•Mounting Hole Through-hole

Custom-made / Inventory

Code	Type			Material International	Material Equivalent	Surface Treatment
HXDSH	Type with Positioning Hole	Mounting Hole Through-hole	Round Flange Type	45	S45C	Black Oxide Finish
HXDSE						Electroless Nickel Plating
HXDSU				0Cr18Ni9	SUS304	—
HXDTH			Opposite Edge Flange Type	45	S45C	Black Oxide Finish
HXDTE						Electroless Nickel Plating
HXDTU				0Cr18Ni9	SUS304	—

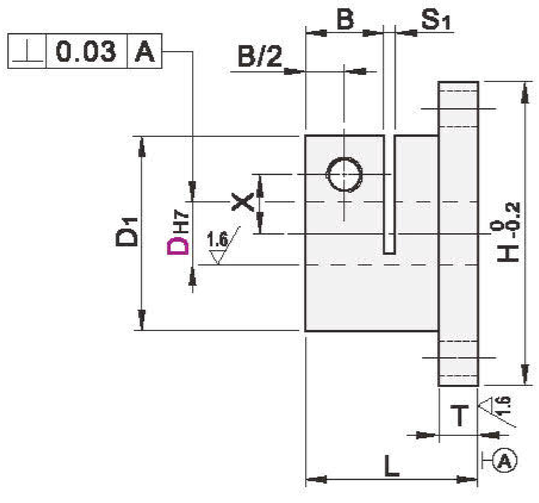

Round Flange Type

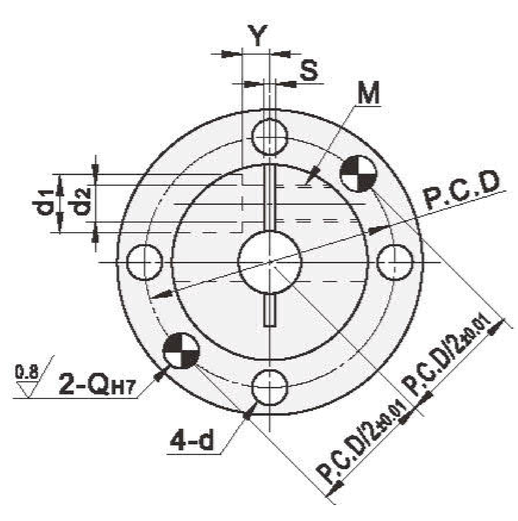

Opposite Edge Flange Type

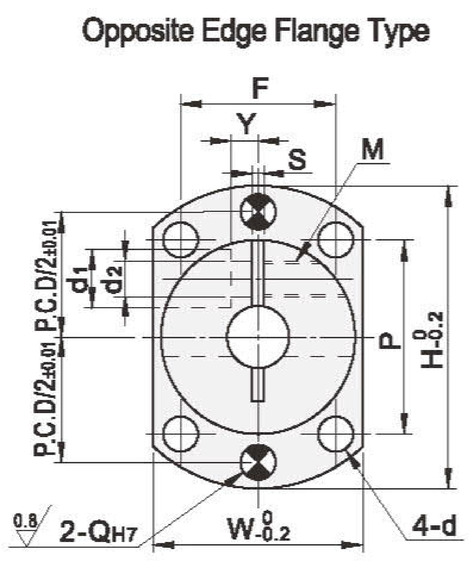

Model ❶Code		❷DH7		L	D1	H	T	B	P.C.D	W	P	F	d	S	S1	X	Y	d1	d2	Q	M	Accessory Screws
Round Flange Type	Opposite Edge Flange Type	12	+0.018 0	22	31.8	52	5.8	10	42	34	35	25	4.5	1.5	1.5	11	4	9	5.6	4	M5	M5×12
		16		30	34.8	56		14	46	37	37	27	5.5			12	5			5		
HXDSH	HXDTH	20	+0.021 0	32	39.8	64	7.8		52	42	43	30	6.6		2	14	6			6		M5×16
HXDSE	HXDTE	25		38	44.8	69		16	57	47	46	34				17						
HXDSU	HXDTU	30		40	54.8	79	9.8		67	57	50	45				20	10	12	6.6		M6	M6×20