Cast Type Guide Shaft Support ▶ Flange Type / T Type

Please order according to the diagram

❶~❷ Select the type and parameters in the order of for ordering

Flange Type

Model (❶Code)	–	❷D
HYARL	–	D8

Price Excluding Tax (Yuan)

Discounted Price

Quantity	1~9	10~
Price	100%	Separate Quotation

Custom-made / Inventory

Code	Type	Material	Surface Treatment	Accessories (1PCS)
HYARL	Flange Type	Aluminum Alloy	Natural Anodizing	Hex Socket Head Cap Screw
HYBRL	T Type			

Flange Type

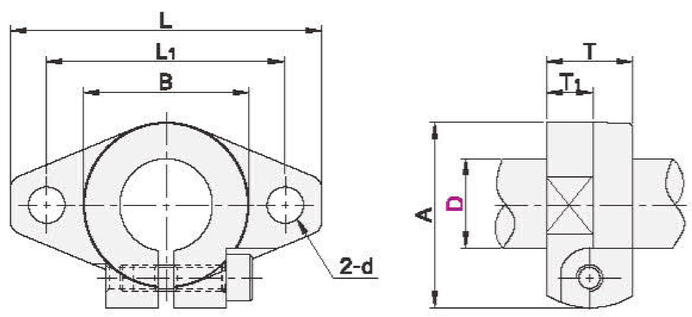

T Type

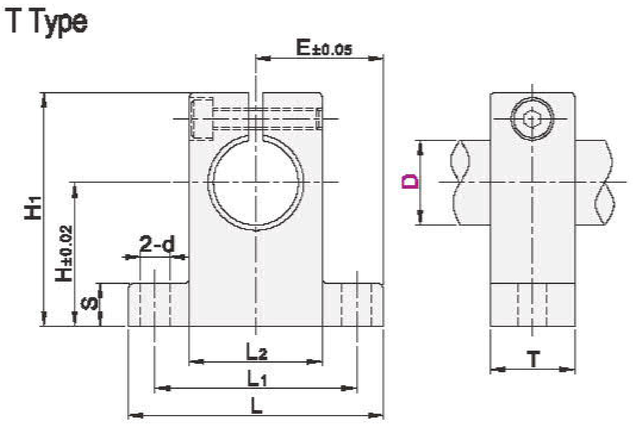

Flange Type

Model ❶Code	Model ❷D	L	A	B	L1	T	T1	d	Accessory Screws
HYARL	10	43	24	20	32	10	5	5.5	M4
	12	47	28	25	36	13	7		
	13								
	16	50	31	28	40	16	8		
	20	60	37	34	48	20		7	M5
	25	70	42	40	56	25	10		
	30	80	50	46	64	30	12	9	M6
	35	92	58	50	72	35	14	12	M8
	40	102	67	56	80	40	16		M10
	50	122	83	70	96	50	19	14	M12
	60	140	95	82	112	60	23		

T Type

Model ❶Code	Model ❷D	H	H1	S	L	L1	L2	T	E	d	Accessory Screws
HYBRL	8	20	32.8	6	42	32	18	14	21	5.5	M4
	10										
	12	23	37.5				20				
	13	23									
	16	27	44	8	48	38	25	16	24		
	20	31	51	10	60	45	30	20	30	6.6	M5
	25	35	60	12	70	56	38	24	35		M6
	30	42	70		84	64	44	28	42	9	
	35	50	82	15	98	74	50	32	49	11	M8
	40	60	96		114	90	60	36	57		