Base Mounted Guide Shaft Support ▶ Side Opening Type

Please order according to the diagram

❶~❸ Select the type and parameters in the order of for ordering

Model (❶Code)	–	❷DH7	–	❸H
HZGSH		D8		H10

Price Excluding Tax (Yuan)

Discounted Price

Quantity	1~9	10~
Price	100%	Separate Quotation

Custom-made / Inventory

CAD 2D 3D

Code	Type	Material International	Material Equivalent	Surface Treatment	Accessories
HZGSH	Side Opening Type	45	S45C	Black Oxide Finish	1 Set Hexagon Socket Head Cap Screw
HZGSE				Electroless Nickel Plating	1 Set Hexagon Socket Head Cap Screw (Stainless Steel)
HZGSU		0Cr18Ni9	SUS304	—	
HZGSY		LD31	A6063	Natural Anodizing	

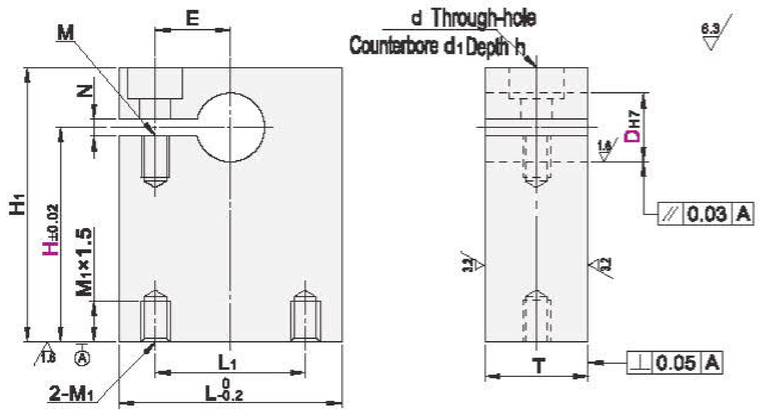

Model ❶Code	❷DH7		❸H	L	H1	T	L1	E	M	M1	d	d1	h	N
HZGSH HZGSE HZGSU HZGSY	8	+0.015 0	25 30	26	H+6.8	12	16	8	M4 Depth 8	4	4.5	8	4.7	2
	10		25 30	32	H+8.8		20	10						
	12		25 30		H+9.8									
	13		25 30		H+10.8		21	10.5						
	15	+0.018 0	25 30 40	34	H+11.8		23	11.5						
	16		25 30 40											
	18		30 40 50	44	H+14.8	16	28	14	M6 Depth 12	6	6.6	11	6.7	
	20		30 40 50	50			34	17						
	25	+0.021 0	30 40 50		H+17.8		36	18						
	30		40 50 60	70	H+20.8	22	48	24	M8 Depth 16	8	9	14	9.2	3
	35	+0.025 0	40 50 60		H+23.8									
	40		40 50 60	76	H+26.8		56	28						