Locking Collar ▸ Standard type
Locked by Set Screws

Please order according to the diagram

❶~❸ Select the type and parameters in the order of for ordering

Model (❶Code)	–	❷D	–	❸B
UACDP	–	D3	–	B6

Price Excluding Tax (Yuan)

Discounted Price

Quantity	1~9	10~
Price	100%	Separate Quotation

Custom-made / Inventory

Code	Type		Material International	Material Equivalent	Surface Treatment	Accessories
UACDP	Locked by Set Screws	Standard type	45	S45C	Black Oxide Finish	2 Set Screw Lock
UACDQ					Electroless Nickel Plating	2 Set Screw Lock (Stainless Steel)
UACDR			0Cr18Ni9	SUS304	—	
UACDU			LY11	A2017		
UACDS					Natural Anodizing	
UACDT					Black Anodizing	2 Set Screw Lock

If rust prevention is required, stainless steel material or electroless nickel plating products are preferred

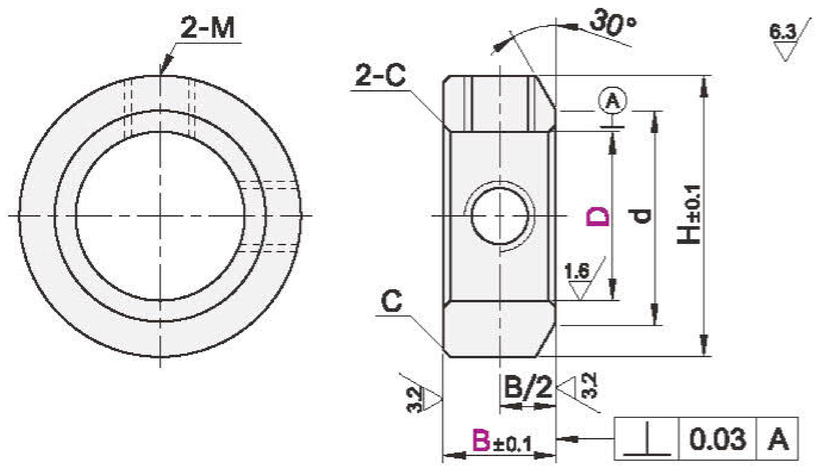

Model ❶Code	❷D		❸B	H	d	C	Setscrew M× Length
Standard type (S45C) UACDP UACDQ (SUS304) UACDR (A2017) UACDU UACDS UACDT	3	+0.05 +0.01	6 8	7	4.5	0.3	M3×3
	4		6 8	8	5.5		
	5		6 8 10	11	10		M4×3
	6		6 8 10	12	11		
	8		6 8 10	14	12		
	10		6 8 10	16	13		
	12		6 8 10 12	20	15		M5×4 Only applies to B6
	13		8 10 12	22	18		
	15		8 10 12	24	20		M4×3
	16		8 10 12 15	26	22	0.6	M6×5 Only applies to B8
	18		10 12 15	32	27		
	20		10 12 15				M5×4
	25		12 15 18	38	31		
	30		15 18 20	46	38	0.8	M8×6
	35		15 18 20	50	40		
	40		20 22	60	45		M10×8
	50		22 25	70	55		