Locking Collar ▸ Double Threaded Hole Type / Four Threaded Hole Type

Locked by Set Screws

Please order according to the diagram

❶~❷ Select the type and parameters in the order of for ordering

Model (❶Code)	—	❷D
UAEAP		D3

Price Excluding Tax (Yuan)

Discounted Price

Quantity	1~9	10~
Price	100%	Separate Quotation

Custom-made / Inventory

Code		Material		Surface Treatment	Accessories
Double Threaded Hole Type	Four Threaded Hole Type	International	Equivalent		
UAEAP	UAEBP	45	S45C	Black Oxide Finish	2 Set Screw Lock
UAEAQ	UAEBQ			Electroless Nickel Plating	2 Set Screw Lock (Stainless Steel)
UAEAR	UAEBR	0Cr18Ni9	SUS304	—	

If rust prevention is required, stainless steel material or electroless nickel plating products are preferred

Double Threaded Hole Type

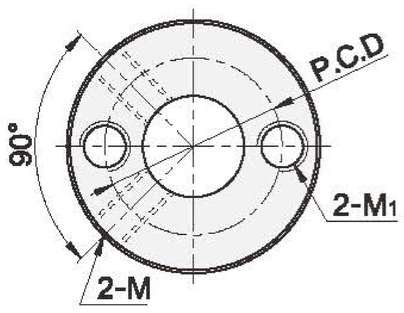

Four Threaded Hole Type

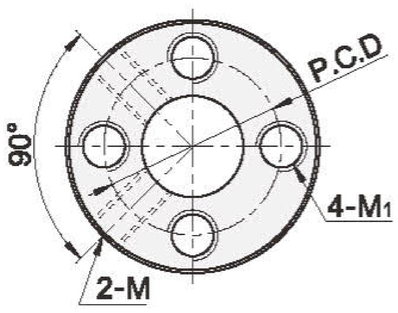

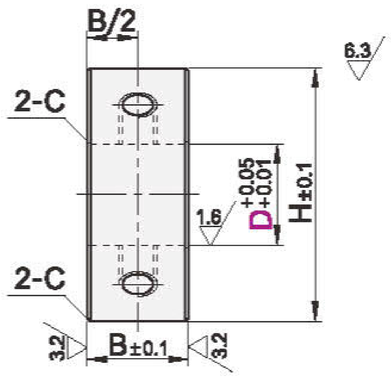

Model ❶Code	❷D	B	H	M1	P.C.D	C	Setscrew M× Length
Double Threaded Hole Type UAEAP UAEAQ UAEAR / Four Threaded Hole Type UAEBP UAEBQ UAEBR	3	6	18	M3	11	0.6	M3×3
	4						
	5	10	22		15		M4×4
	6						
	8		24	M4	16		
	10		26		18		
	12	12	32	M5	22		M5×5
	13		33		23		
	15		35		25		
	16		40	M6	28		M6×6
	18		44		32		
	20						
	25		49		37		
	30	15	54		42	1	M8×8
	35		59		47		