Locking Collar ▸ Standard type
Open type

Please order according to the diagram

❶~❸ Select the type and parameters in the order of for ordering

Model (❶Code)	–	❷D	–	❸B
UBCDP	–	D3	–	B8

Price Excluding Tax (Yuan)

Discounted Price

Quantity	1~9	10~
Price	100%	Separate Quotation

Custom-made / Inventory

CAD 2D 3D

Code	Type	Material International	Material Equivalent	Surface Treatment	Accessories
UBCDP	Standard type	45	S45C	Black Oxide Finish	1 Set Hexagon Socket Head Cap Screw
UBCDQ				Electroless Nickel Plating	1 Set Hexagon Socket Head Cap Screw (Stainless Steel)
UBCDR		0Cr18Ni9	SUS304	—	
UBCDU		LY11	A2017		
UBCDS				Natural Anodizing	
UBCDT				Black Anodizing	1 Set Hexagon Socket Head Cap Screw

If rust prevention is required, stainless steel material or electroless nickel plating products are preferred

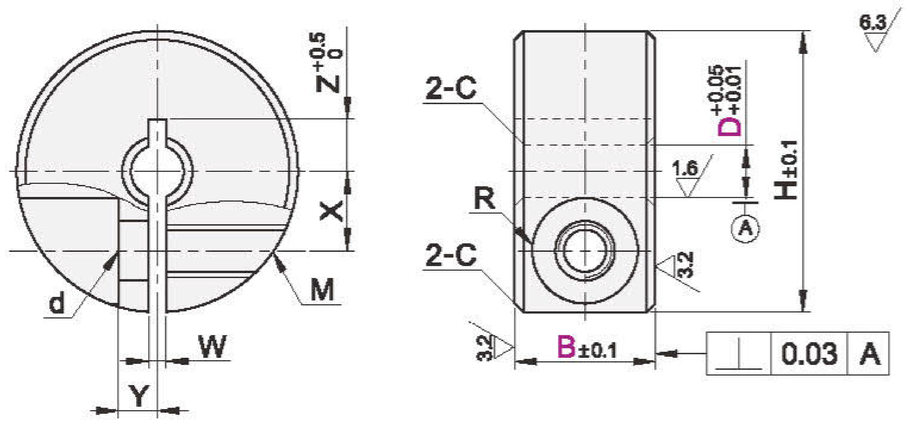

Standard type

Model ❶Code	❷D	❸B	H	M	d	R	W	X	Y	Z	C
(S45C) UBCDP UBCDQ	3	8	16	M3	3.4	3	1	4.5	2.2	3~5	0.6
	4		18					5	3	3.5~6	
	5		20					5.5	4	5~6.5	
		10	22	M4	4.5	3.75		6.5			
	6	8	20	M3	3.4	3		6		6~7	
		10		M4	4.5	3.75					
	8	8	25	M3	3.4	3	1.5	8		7~9	
		10		M4	4.5	3.75					
		12	30	M5	5.5	4.5		9	5	7~10	
		15		M6	6.6	6					
	10	8		M3	3.4	3				8~10	
		10		M4	4.5	3.75					
		12		M5	5.5	4.5		10			
		15	35	M6	6.6	6			6	8~12	
	12	8	30	M3	3.4	3			5	9~10	
		10		M4	4.5	3.75					
		12		M5	5.5	4.5					
		15	35	M6	6.6	6		11	6	9~12	
	13	10	30	M4	4.5	3.75		10	5	10	
		12	34	M5	5.5	4.5		11		10~12	
		15	35	M6	6.6	6			6		
	15	10	34	M4	4.5	3.75		11.5		10~11	
		12	35	M5	5.5	4.5		12		11~13	
(SUS304) UBCDR		15	40	M6	6.6	6		13	8		
	16	10	35	M5	5.5	4.5		12	6	11~12	
		12									
		15	40	M6	6.6	6		13	8	11~13	
	18 20	10		M5	5.5	4.5		14	7	13	
		12									
		15	45	M6	6.6	6		15	8	13~15	
		20						16			
	25	12		M5	5.5	4.5		17	7	16	
		15	50	M6	6.6	6		18	10	16~18	
		20	55					20		16~20	
	30	15								18~20	1
		20	60	M8	9	7		23		18~21	
	35	15		M6	6.6	6	2		12	21	
	40	18	70	M8	9	7		26	13	23	
	50	22	85	M10	11	9	3	32	16	28	
	(60)	22	95					37	18	—	
	(80)	32	130	M16	18	13	5	50	22		1.6
	(100)	36	150					60	26		

Model ❶Code	❷D	❸B	H	M	d	R	W	X	Y	Z	C
(A2017) UBCDU UBCDS UBCDT	3	8	16	M3	3.4	3	1	4.5	2.2	3	0.6
	4	8	18					5	3	3.5	
	5	8	20					5.5	4	5	
	6	8						6		6	
	8	8	25					7	5	7	
		10									
	10	10	30	M4	4.5	3.75		9		8	
	12	10						10		9	
	13	10								10	
	15	10	34					11.5	6		
	16	10	35				1.5	12		11	
		12									
	20	10	40	M5	5.5	4.5		14	7	13	
		12									
		15									
	25	12	45					17		16	
		15									
	30	15	55	M6	6.6	6		20	10	18	1
	35	15	60				2	23	12	21	
	40	18	70	M8	9	7		26	13	23	
	50	22	85	M10	11	9	3	32	16	28	