Locking Collar ▸ Double Counterbore Locking Type / Triple Counterbore Locking Type

Open type

Please order according to the diagram

❶~❸ Select the type and parameters in the order of for ordering

Model (❶Code)	–	❷D	–	❸B
UBDBP	–	D6	–	B8

Discounted Price

Quantity	1~9	10~
Price	100%	Separate Quotation

Price Excluding Tax (Yuan)

Custom-made / Inventory

Code	Type		Material International	Material Equivalent	Surface Treatment	Accessories
UBDBP	Open type	Double Counterbore Locking Type	45	S45C	Black Oxide Finish	1 Set Hexagon Socket Head Cap Screw
UBDBQ					Electroless Nickel Plating	1 Set Hexagon Socket Head Cap Screw (Stainless Steel)
UBDBR			0Cr18Ni9	SUS304	—	
UBDCP		Triple Counterbore Locking Type	45	S45C	Black Oxide Finish	1 Set Hexagon Socket Head Cap Screw
UBDCQ					Electroless Nickel Plating	1 Set Hexagon Socket Head Cap Screw (Stainless Steel)
UBDCR			0Cr18Ni9	SUS304	—	

! If rust prevention is required, stainless steel material or electroless nickel plating products are preferred

Double Counterbore Locking Type

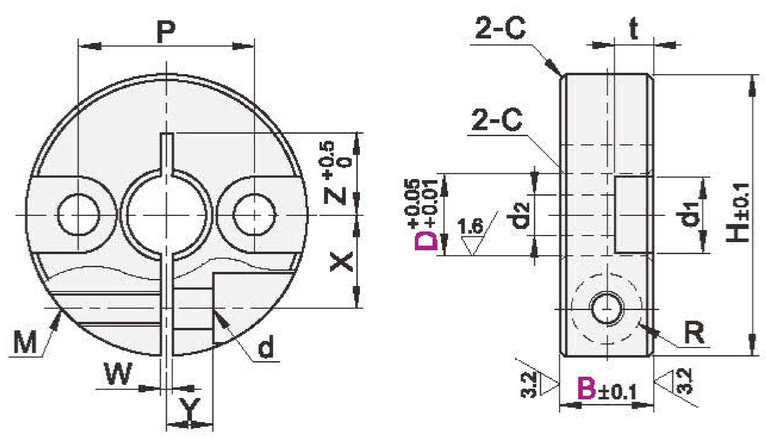

Triple Counterbore Locking Type

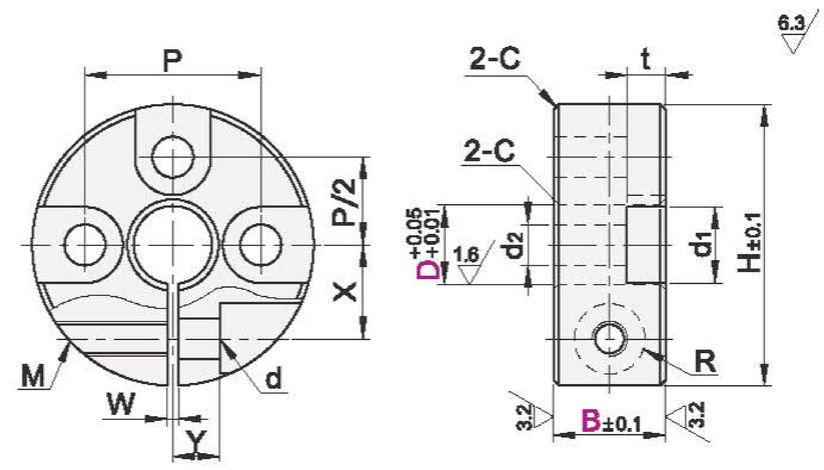

Double Counterbore Locking Type / Triple Counterbore Locking Type

Model ❶Code	❷D	❸B	H	M	d	R	W	X	Y	Z	P	d2	d1	t	C
Double Counterbore Locking Type UBDBP UBDBQ UBDBR / Triple Counterbore Locking Type UBDCP UBDCQ UBDCR	6	8	24	M3	3.4	3	1	8	4	6~8	15	3.5	6.5	3.3	0.6
		10		M4	4.5	3.75									
	8	8	25	M3	3.4	3	1.5			7~8	17				
		10	28	M4	4.5	3.75		9	5	8~9	18	4.5	8	4.4	
	10		33					10		10~11	22	5.5	9.5	5.4	
		12		M5	5.5	4.5		11							
		15	36	M6	6.6	6		13	6	11~12	23	6.6	11	6.5	
	12	10	35	M4	4.5	3.75		11	5	10~12	24	5.5	9.5	5.4	
		12		M5	5.5	4.5									
		15	38	M6	6.6	6		13	6	11~13	25	6.6	11	6.5	
	13	10	33	M4	4.5	3.75		11	5	10~11	23	4.5	8	4.4	
		12	36	M5	5.5	4.5				11~13	25	5.5	9.5	5.4	
		15		M6	6.6	6		12	6						
	15	12	38	M5	5.5	4.5		13			27				
		15	40	M6	6.6	6			8		28	6.6	11	6.5	
	16	10	36	M5	5.5	4.5		12	6	11~12	26	4.5	8	6.4	
		12	38					13	6	12~13	28	5.5	9.5	6.4	
		15	42	M6	6.6	6			8	13~14	29	6.6	11	6.5	
	20	12		M5	5.5	4.5		15	7		32	5.5	9.5	6.4	
		15	45	M6	6.6	6			8	14~15	33	6.6	11	6.5	
		20						16							
	25	12	48	M5	5.5	4.5		17	7	14~16	37	5.5	9.5	5.4	
		15	50	M6	6.6	6		18	10	15~17	38	6.6	11	6.5	
	30		55					20		20	43				
	35		60				2	23	12	21	48				1
	40	18	78	M8	9	7		28	13	26	60	9	14	8.6	
	50	22	88	M10	11	9	3	32	16	29	71	11	17.5	10.8	