Locking Collar ▸ Three-Hole Locking Type / Three Threaded Hole Locking Type/Slot Avoidance Type
Open type

Please order according to the diagram

❶~❸ Select the type and parameters in the order of for ordering

Three-Hole Locking Type / Three Threaded Hole Locking Type

Model (❶Code)	–	❷D	–	❸B
	–	D6	–	B10

Price Excluding Tax (Yuan)

Discounted Price

Quantity	1~9	10~
Price	100%	Separate Quotation

Three-Hole Locking Type / Three Threaded Hole Locking Type

Custom-made / Inventory

Code		Material		Surface Treatment	Accessories
Three-Hole Locking Type	Three Threaded Hole Locking Type	International	Equivalent		
UBGCP	UBGEP	45	S45C	Black Oxide Finish	1 Set Hexagon Socket Head Cap Screw
UBGCQ	UBGEQ			Electroless Nickel Plating	1 Set Hexagon Socket Head Cap Screw
UBGCR	UBGER	0Cr18Ni9	SUS304	—	(Stainless Steel)

If rust prevention is required, stainless steel material or electroless nickel plating products are preferred

Three-Hole Locking Type

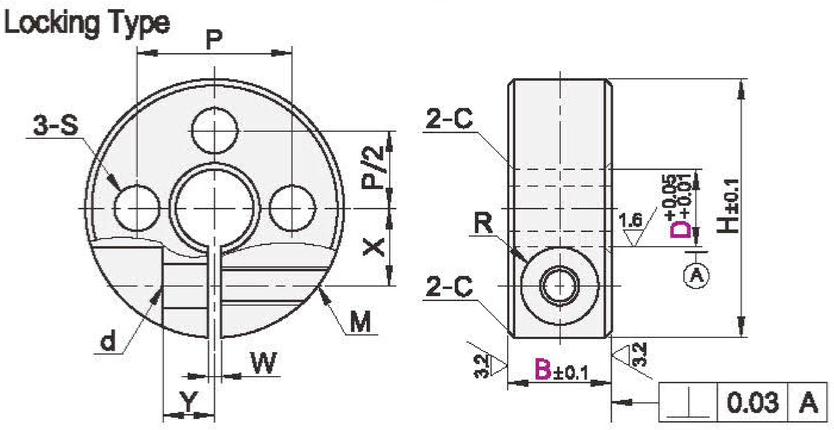

Three Threaded Hole Locking Type

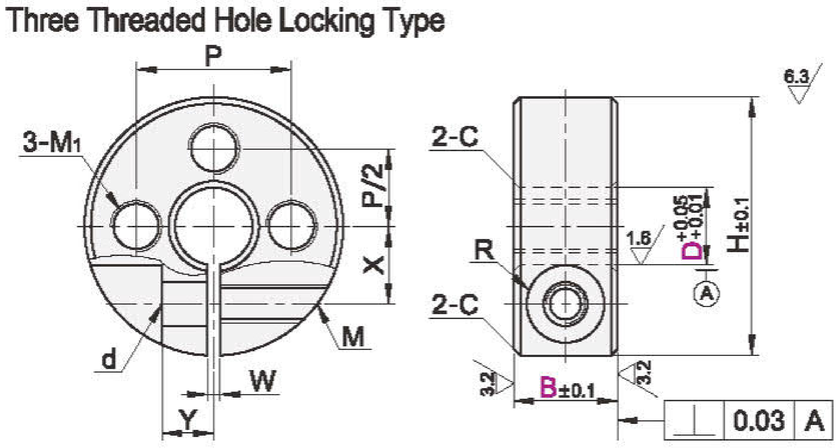

Model ❶Code	❷D	❸B	H	M	d	R	W	X	Y	S	P	M1	C
Three-Hole Locking Type UBGCP UBGCQ UBGCR	6	8	20	M3	3.4	3	1	6	4	3.5	12	M3	0.5
		10		M4	4.5	3.75					13		
	8	8	25	M3	3.4	3	1.5	8	5	4.5	14	M4	
		10		M4	4.5	3.75					18		
		12	30	M5	5.5	4.5		9		5.5	20	—	
		15		M6	6.6	6						M6	
	10	8		M3	3.4	3							
		10		M4	4.5	3.75							
		12		M5	5.5	4.5		10			22	M5	
		15	35	M6	6.6	6			6	6.6	24	—	
	12	8	30	M3	3.4	3			5	5.5			
		10		M4	4.5	3.75							
		12A		M5	5.5	4.5							
		15	35	M6	6.6	6		11	6	6.6	24	—	
Three Threaded Hole Locking Type UBGEP UBGEQ UBGER	13	10	30	M4	4.5	3.75		10	5	4.5	22	M4	
		12	34	M5	5.5	4.5		11		5.5	23	—	
		15	35	M6	6.6	6					24		
	15	10	34	M4	4.5	3.75		11.5	6	4.5	23	M4	
		12	35	M5	5.5	4.5		12		5.5	26	M5	
		15	40	M6	6.6	6		13	8	6.6	28	M6	
	16	10	35	M5	5.5	4.5		12	6	4.5	24	—	
		12								5.5	26	M5	
		15		M6	6.6	6		13	8	6.6	28	M6	
	20	10	40	M5	5.5	4.5		14	7	4.5		M4	
		12								5.5	30	M5	
		15	45	M6	6.6	6		15	8	6.6	34	M6	
	25	12	45	M5	5.5	4.5		17	7	5.5	36	M5	
		15	50	M6	6.6	6		18	10	6.6	38	M6	
	30	15	55					20	10		44		
	35	15	60				2	23	12		48		1
	40	18	70	M8	9	7		26	13	9	56	M8	
	50	22	85	M10	11	9	3	32	16	11	68	—	

Slot Avoidance Type

Custom-made / Inventory

Code	Type	Material		Surface Treatment	Accessories
		International	Equivalent		
UBHAP	Slot Avoidance Type	45	S45C	Black Oxide Finish	1 Set Hexagon Socket Head Cap Screw
UBHAQ				Electroless Nickel Plating	1 Set Hexagon Socket Head Cap Screw (Stainless Steel)

If rust prevention is required, stainless steel material or electroless nickel plating products are preferred

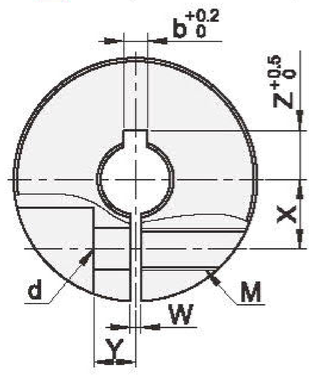

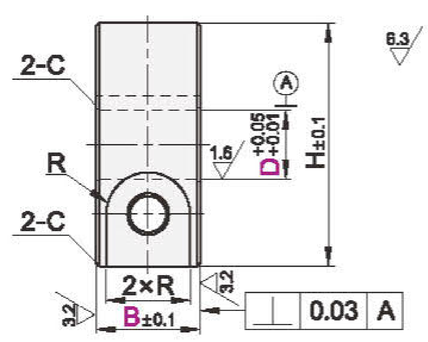

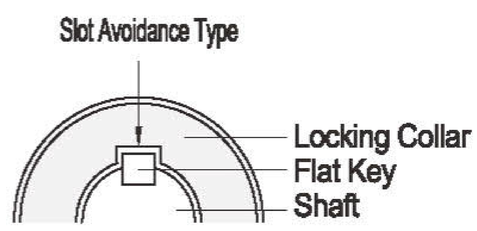

Model ❶Code	❷D	❸B	H	M	d	R	W	X	Y	Z	b	C
UBHAP UBHAQ	10	10	30	M4	4.5	3.75	1.5	9	5	7	3.5	0.5
		12		M5	5.5	4.5		10				
		15	35	M6	6.6	6			6			
	12	10	30	M4	4.5	3.75			5	8.5	4.5	
		12		M5	5.5	4.5						
		15	35	M6	6.6	6		11				
	15	10	34	M4	4.5	3.75		11.5	6	10.5	5.5	
		12	35	M5	5.5	4.5		12				
		15	40	M6	6.6	6		13	8			
	20	10		M5	5.5	4.5		14	7	13.5	6.5	
		12				4.5						
		15	45	M6	6.6	6		15	8			
	25	12		M5	5.5	4.5		17	7	16.5	8.5	
		15	50	M6	6.6	6		18	10			
	30	15	55			6		20		19		1