Polyurethane Locking Collar ▸ Standard type Open type

Please order according to the diagram

❶~❷ Select the type and parameters in the order of for ordering

Standard type

Model(❶Code)	—	❷D
UBKDP	—	D6

Price Excluding Tax (Yuan)

Discounted Price

Quantity	1~9	10~
Price	100%	Separate Quotation

Custom-made / Inventory

CAD 2D 3D

Code	Type		Material International	Material Equivalent	Surface Treatment	Accessories	Cushion Pad
UBKDP	Open type	Standard type	45	S45C	Black Oxide Finish	Polyurethane (Shore A70) Heat Resistance: 70℃	1 Set Hexagon Socket Head Cap Screw
UBKDQ					Electroless Nickel Plating		1 Set Hexagon Socket Head Cap Screw (Stainless Steel)
UBKDR			0Cr18Ni9	SUS304	—		
UBKFP		Compact Type	45	S45C	Black Oxide Finish		1 Set Hexagon Socket Head Cap Screw
UBKFQ					Electroless Nickel Plating		1 Set Hexagon Socket Head Cap Screw (Stainless Steel)
UBKFR			0Cr18Ni9	SUS304	—		

Features: Equipped with polyurethane locking collar, it can reduce the metallic noise generated during collisions between metals.

If rust prevention is required, stainless steel material or electroless nickel plating products are preferred

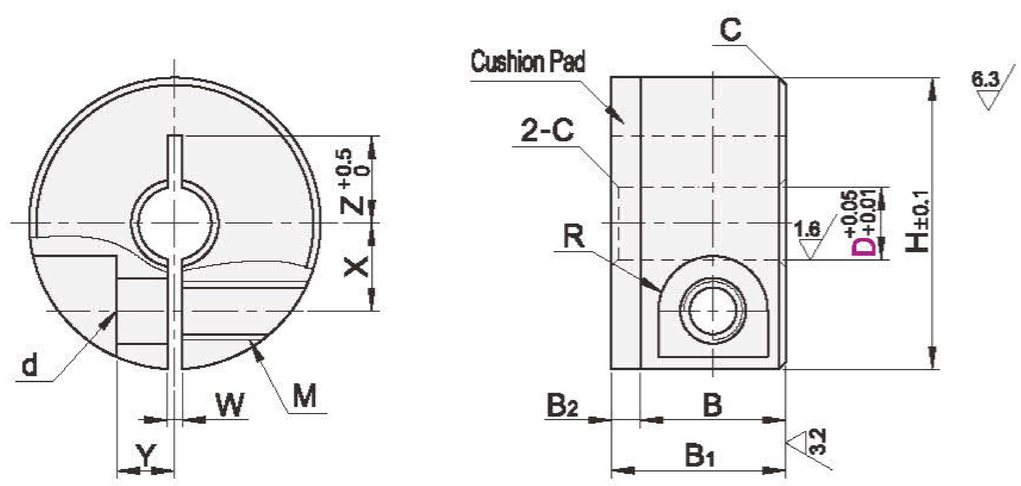

Standard type

Model ❶Code	❷D	B	B1	B2	H	M	d	R	W	X	Y	Z	C
UBKDP UBKDQ UBKDR	6	10	12	2	20	M4	4.5	3.75	1	6	4	6~6.5	0.5
	8	15	18	3	30	M6	7	6	1.5	9	5	7~10	
	10				35					10	6	8~12.5	
	12									11		9~12.5	
	15				40					13	8	11~13	
	16												
	20		20	5	45					15		13~15	1
	25				50					18	10	16~18	
	30				55					20		15~20	
	35				60					23	12	17.5~21	
	40	18	23		70	M8	9	7	2	26	13	20~23	
	50	22	27		85	M10	11	9		32	16	25~28	

Compact Type

Model ❶Code	❷D	B	B1	B2	H	M	d	R	W	X	Y	Z	C
UBKFP UBKFQ UBKFR	8	8	10	2	25	M3	3.4	3	1.5	8	5	7~9	0.5
	10				30					9		8~10	
	12									10		9~10	
	16	10	12		35	M5	5.5	4.5		12	6	11~12	
	20		13	3	40					14	7	13	
	25	12	15		45					17		16	
	30				50					20	6	18~20	