Locking Collar ▸ Standard type Detachable Type

Please order according to the diagram

❶~❸ Select the type and parameters in the order of for ordering

Model (❶Code)	–	❷D	–	❸B
UCCDP	–	D3	–	B8

Price Excluding Tax (Yuan)

● Discounted Price

Quantity	1~9	10~
Price	100%	Separate Quotation

Custom-made / Inventory

Code	Type		Material International	Material Equivalent	Surface Treatment	Accessories
UCCDP	Detachable Type	Standard type	45	S45C	Black Oxide Finish	2 Set Hexagon Socket Head Cap Screw
UCCDQ					Electroless Nickel Plating	2 Set Hexagon Socket Head Cap Screw (Stainless Steel)
UCCDR			0Cr18Ni9	SUS304	—	
UCCDU			LY11	A2017		
UCCDS					Natural Anodizing	
UCCDT					Black Anodizing	2 Set Hexagon Socket Head Cap Screw

❗ If rust prevention is required, stainless steel material or electroless nickel plating products are preferred

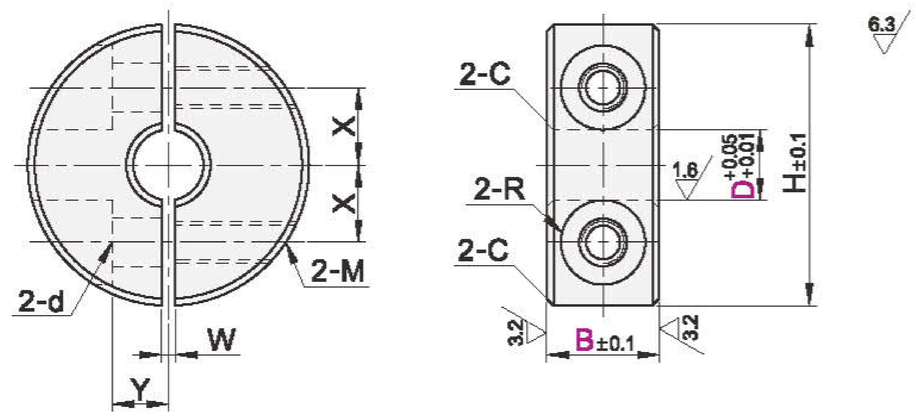

Model ❶Code	❷D	❸B	H	M	d	R	W	X	Y	C
Standard type (S45C) UCCDP UCCDQ (SUS304) UCCDR	3	8	16	M3	3.4	3	1	4.5	2.2	0.6
	4	8	18					5	3	
	5	8	20					5.5	4	
		10	22	M4	4.5	3.75		6.5		
	6	8	20	M3	3.4	3		6		
		10		M4	4.5	3.75				
	8	8	25	M3	3.4	3		8		
		10		M4	4.5	3.75				
		12	30	M5	5.5	4.5		9	5	
		15		M6	6.6	6				
	10	8		M3	3.4	3				
		10		M4	4.5	3.75				
		12		M5	5.5	4.5				
		15	35	M6	6.6	6			6	
	12	8	30	M3	3.4	3		10	5	
		10		M4	4.5	3.75				
		12		M5	5.5	4.5				
		15	35	M6	6.6	6		11	6	
	13	10	30	M4	4.5	3.75		10	5	
		12	34	M5	5.5	4.5		11		
		15	35	M6	6.6	6			6	
	15	10	34	M4	4.5	3.75	1.5	11.5		
		12	35	M5	5.5	4.5		12		
		15	40	M6	6.6	6		13	8	
	16	10	35	M5	5.5	4.5		12	6	
		12								
		15		M6	6.6	6		13	8	
	18	10	40	M5	5.5	4.5		14	7	
		12								
		15	45	M6	6.6	6		15	8	
	20	10	40	M5	5.5	4.5		14	7	
		12								
		15	45	M6	6.6	6		15	8	
	25	12		M5	5.5	4.5		17	7	
		15	50	M6	6.6	6		18	10	
		20	55					20		
	30	15								1
		20	60	M8	9	7		23		
	35	15		M6	6.6	6	2		12	
	40	18	70	M8	9	7		26	13	
	50	22	85	M10	11	9	3	32	16	
	60	22	95					37	18	
	80	32	130	M16	18	13	5	50	22	1.6
	100	36	150					60	26	

Model ❶Code	❷D	❸B	H	M	d	R	W	X	Y	C
Standard type (A2017) UCCDU UCCDS UCCDT	3	8	16	M3	3.4	3	1	4.5	2.2	0.5
	4		18					5	3	
	5		20					5.5	4	
	6							6		
	8		25					8		
	10	10	30	M4	4.5	3.75		9	5	
	12							10		
	13									
	15		34				1.5	11.5	6	
	16		35					12		
	20		40	M5	5.5	4.5		14	7	
	25	12	45					17		
	30	15	55	M6	6.6	6		20	10	
	35		60				2	23	12	1
	40	18	70	M8	9	7		26	13	
	50	22	85	M10	11	9	3	32	16	