Locking Collar ▸ Balanced Type / Side Mounted Type
Detachable Type/Open type

Please order according to the diagram

❶~❸ Select the type and parameters in the order of for ordering

Balanced Type

Model (❶Code)	–	❷D	–	❸B
UCCEP	–	D16	–	B10

Price Excluding Tax (Yuan)

Discounted Price

Quantity	1~9	10~
Price	100%	Separate Quotation

Balanced Type

Custom-made / Inventory

Code	Type		Material International	Material Equivalent	Surface Treatment	Accessories
UCCEP	Detachable Type	Balanced Type	45	S45C	Black Oxide Finish	2 Set Hexagon Socket Head Cap Screw
UCCEQ					Electroless Nickel Plating	2 Set Hexagon Socket Head Cap Screw
UCCER			0Cr18Ni9	SUS304	—	(Stainless Steel)

If rust prevention is required, stainless steel material or electroless nickel plating products are preferred

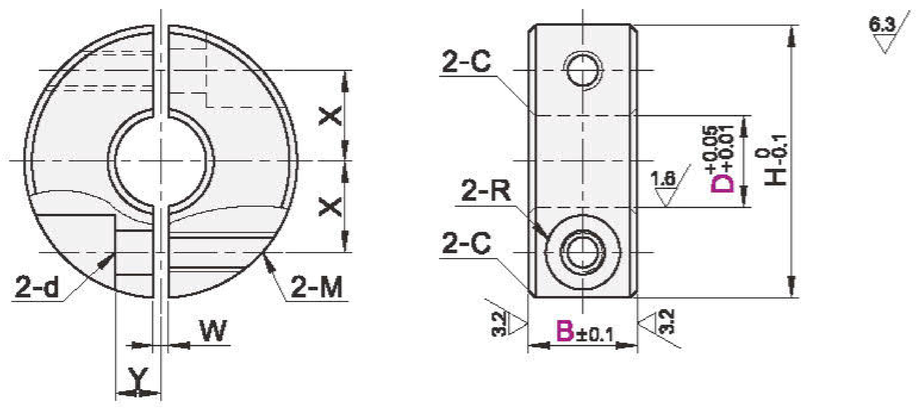

Model ❶Code	❷D	❸B	H	M	d	R	W	X	Y	C
UCCEP UCCEQ UCCER	16	10	35	M5	5.5	4.5	1.5	12	6	0.5
		12								
	17	10	40					14	7	
		12								
	20	10								
		12								
		15	45	M6	6.6	6		15	8	
	25	12		M5	5.5	4.5		17	7	
		15	50	M6	6.6	6		18	10	
	30	15	55					20		
		20	60	M8	9	7		23		
	35	15		M6	6.6	6	2		12	1
	40	18	70	M8	9	7		26	13	
	50	22	85	M10	11	9	3	32	16	

Side Mounted Type

Custom-made / Inventory

Code	Type		Material International	Material Equivalent	Surface Treatment	Accessories
UCFBP	Side Mounted Type	Open type	45	S45C	Black Oxide Finish	1 Set Hexagon Socket Head Cap Screw
UCFBQ					Electroless Nickel Plating	1 Set Hexagon Socket Head Cap Screw
UCFBR			0Cr18Ni9	SUS304	—	(Stainless Steel)
UCFCP		Detachable Type	45	S45C	Black Oxide Finish	2 Set Hexagon Socket Head Cap Screw
UCFCQ					Electroless Nickel Plating	1 Set Hexagon Socket Head Cap Screw
UCFCR			0Cr18Ni9	SUS304	—	(Stainless Steel)

If rust prevention is required, stainless steel material or electroless nickel plating products are preferred

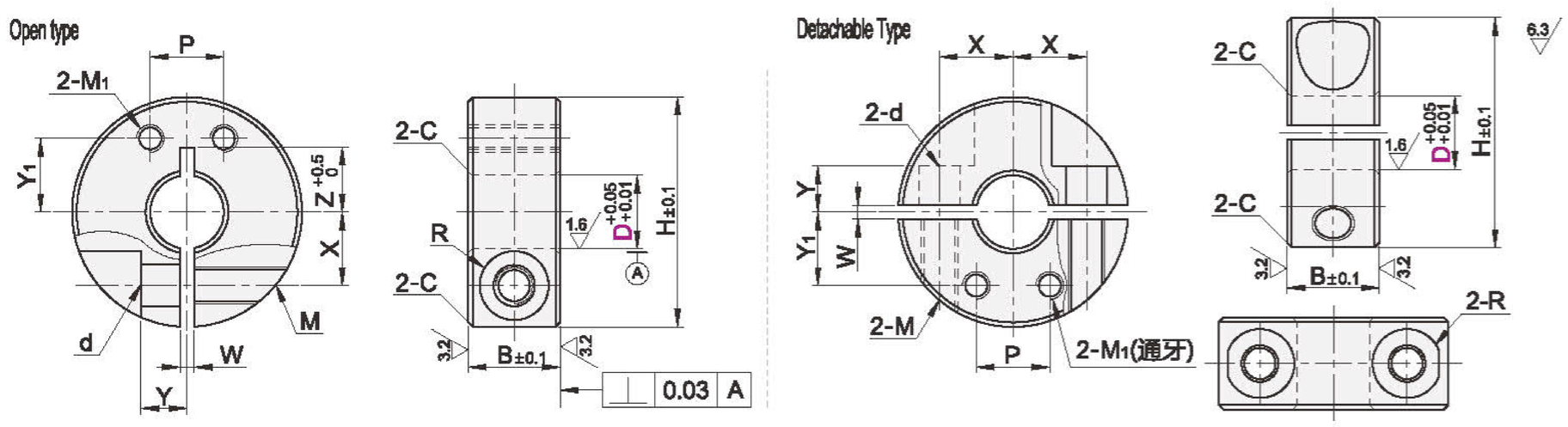

Model ❶Code	❷D	B	H	M	d	R	W	X	Y	Z	M1	Y1	P	C
Open type UCFBP UCFBQ UCFBR Detachable Type UCFCP UCFCQ UCFCR	8	10	25	M4	4.5	3.75	1.5	8	5	7~9	M3	8	8	0.5
	10		30					9		8~10	M4	10	10	
	12							10		9~10				
	13													
	15		34					11.5	6	10~12		12	12	
	15A										M5			
	16		35					12		11~12				
	16A										M4			
	20A		40	M5	5.5	4.5		14	7	13		14		
	20										M5		14	
	25	12	45					17		16~18		17	16	
	25A										M4		12	
	30	15	55	M6	6 6	6		20	10	18~20	M6	20	20	1