Locking Collar ▸ Single-Hole Locking Type / Double Threaded Hole Locking Type/Double Threaded Hole Locking Type

Detachable Type

Please order according to the diagram

❶~❸ Select the type and parameters in the order of for ordering

Single-Hole Locking Type

Model (❶Code)	–	❷D	–	❸B
UCDAR	–	D10	–	B12

Price Excluding Tax (Yuan)

Discounted Price

Quantity	1~9	10~
Price	100%	Separate Quotation

Custom-made / Inventory

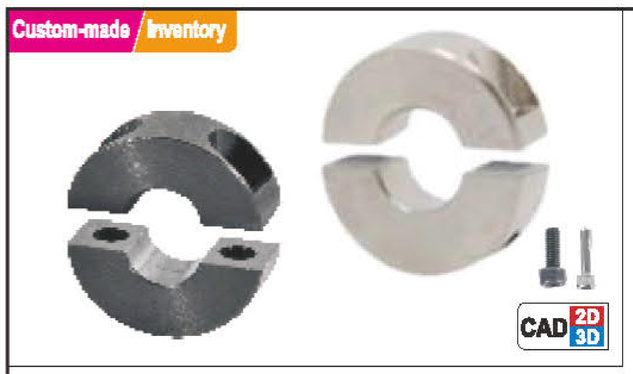

Code	Type		Material International	Material Equivalent	Surface Treatment	Accessories
UCDAR	Detachable Type	Single-Hole Locking Type	0Cr18Ni9	SUS304	—	2 Set Hexagon Socket Head Cap Screw
UCDBP		Double Threaded Hole Locking Type	45	S45C	Black Oxide Finish	2 Set Hexagon Socket Head Cap Screw
UCDBQ					Electroless Nickel Plating	2 Set Hexagon Socket Head Cap Screw (Stainless Steel)
UCDBR			0Cr18Ni9	SUS304	—	
UCDCP		Double Threaded Hole Locking Type	45	S45C	Black Oxide Finish	2 Set Hexagon Socket Head Cap Screw
UCDCQ					Electroless Nickel Plating	2 Set Hexagon Socket Head Cap Screw (Stainless Steel)
UCDCR			0Cr18Ni9	SUS304	—	

If rust prevention is required, stainless steel material or electroless nickel plating products are preferred

Single-Hole Locking Type

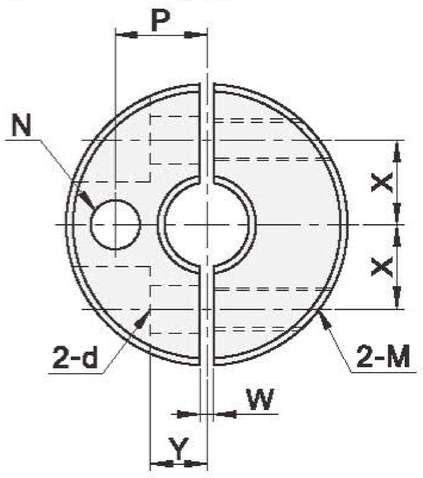

Double Threaded Hole Locking Type

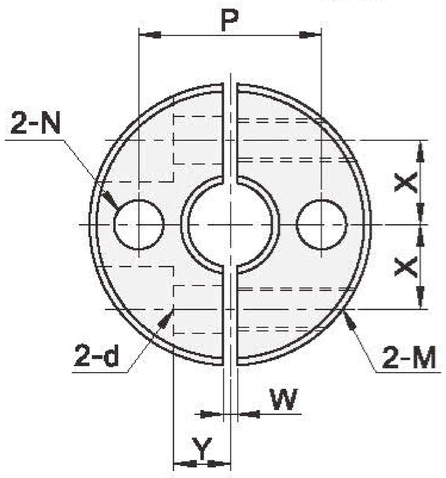

Double Threaded Hole Locking Type

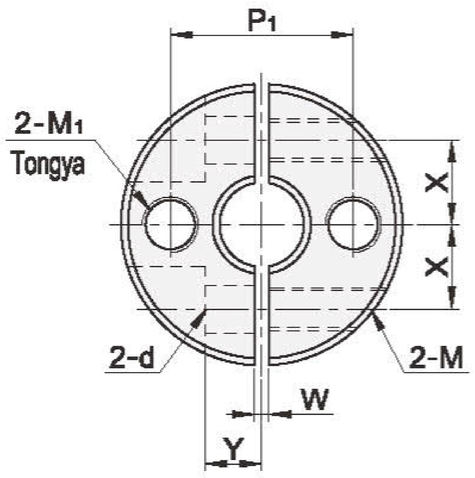

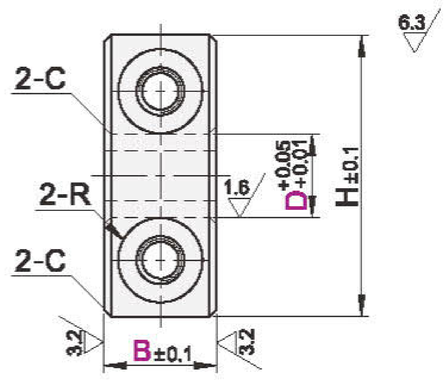

Single-Hole Locking Type

Model ❶Code	❷D	❸B	H	M	d	R	W	X	Y	N	P	C
Single-Hole Locking Type UCDAR	10	12	40	M4	4.5	3.75	1.5	10	9.5	6.5	14.5	0.6
	12											
	14	13	45	M5	5.5	4.5		11	10	9	16.5	
	15							12.5				
	16											
	18		50					17	8		18.5	
	20											
	22	18	65	M6	6.6	6		22	9.5	13	23.5	
	24											
	25							23	8.5			
	30	20	75					26	12		27	1
	32		80				2	29			30	
	35							30	13			

Double Threaded Hole Locking Type / Double Threaded Hole Locking Type

Model ❶Code	❷D	❸B	H	M	d	R	W	X	Y	Double Threaded Hole Locking Type N Tongya	Double Threaded Hole Locking Type P	Double Threaded Hole Locking Type M1	Double Threaded Hole Locking Type P1	C
Double Threaded Hole Locking Type (S45C) UCDBP UCDBQ (SUS304) UCDBR Double Threaded Hole Locking Type (S45C) UCDCP UCDCQ (SUS304) UCDCR	6	8	20	M3	3.4	3	1	6	4	3.5	13	–	–	0.5
		10		M4	4.5	3.75								
	8	8	25	M3	3.4	3		8	5	4.5	16.5			
		10		M4	4.5	3.75		9						
		12	30	M5	5.5	4.5					19			
		15		M6	6.6	6								
	10	8		M3	3.4	3					20		20	
		10		M4	4.5	3.75								
		12		M5	5.5	4.5		10						
		15	35	M6	6.6	6			6		22.5			
	12	8	30	M3	3.4	3			5		21		22	
		10		M4	4.5	3.75								
		12		M5	5.5	4.5								
		15	35	M6	6.6	6		11	6		23.5			
	13	10	30	M4	4.5	3.75		10	5		21.5		24	
		12	34	M5	5.5	4.5		11			23.5			
		15	35	M6	6.6	6					24			
	15	10	34	M4	4.5	3.75	1.5	11.5	6	5.5	24.5		25	
		12	35	M5	5.5	4.5		12			25			
		15	40	M6	6.6	6		13	8		27.5			
	16	10	35	M5	5.5	4.5		12	6		25.5		28	
		12												
		15	40	M6	6.6	6		13	8		28			
	18	10		M5	5.5	4.5		14	7		29			
		12												
		15	45	M6	6.6	6		15	8		31.5		30	
	20	10	40	M5	5.5	4.5		14	7		30			
		12												
		15	45	M6	6.6	6		15	8		32.5			
	25	12		M5	5.5	4.5		17	7		35			
		15	50	M6	6.6	6		18			37.5		35	
		20	55					20	10	6.6	40			
	30	15									42.5		42	
		20	60	M8	9	7		23			45	M6		
	35	15		M6	6.6	6	2		12		47.5		47	1
	40	18	70	M8	9	7		26	13	9	55	M8	56	
	50	22	85	M10	11	9	3	32	16	11	67.5		66	