Locking Collar ▸ Locked by Set Screws / Open type/Detachable Type
Single-Side Cutting Type

Please order according to the diagram

❶~❷ Select the type and parameters in the order of for ordering

Locked by Set Screws

Model (❶Code)	—	❷D
UDDAP	—	D6

Price Excluding Tax (Yuan)

Discounted Price

Quantity	1~9	10~
Price	100%	Separate Quotation

Custom-made / Inventory

Code	Type		Material International	Material Equivalent	Surface Treatment	Accessories
UDDAP	Single-Side Cutting Type	Locked by Set Screws	45	S45C	Black Oxide Finish	2 Set Screw Lock
UDDAQ					Electroless Nickel Plating	2 Set Screw Lock (Stainless Steel)
UDDAR			0Cr18Ni9	SUS304	—	
UDDBP		Open type	45	S45C	Black Oxide Finish	1 Set Hexagon Socket Head Cap Screw
UDDBQ					Electroless Nickel Plating	1 Set Hexagon Socket Head Cap Screw (Stainless Steel)
UDDBR			0Cr18Ni9	SUS304	—	
UDDBU			LY11	A2017		
UDDCP		Detachable Type	45	S45C	Black Oxide Finish	2 Set Hexagon Socket Head Cap Screw
UDDCQ					Electroless Nickel Plating	2 Set Hexagon Socket Head Cap Screw (Stainless Steel)
UDDCR			0Cr18Ni9	SUS304	—	
UDDCU			LY11	A2017		

! If rust prevention is required, stainless steel material or electroless nickel plating products are preferred

Locked by Set Screws

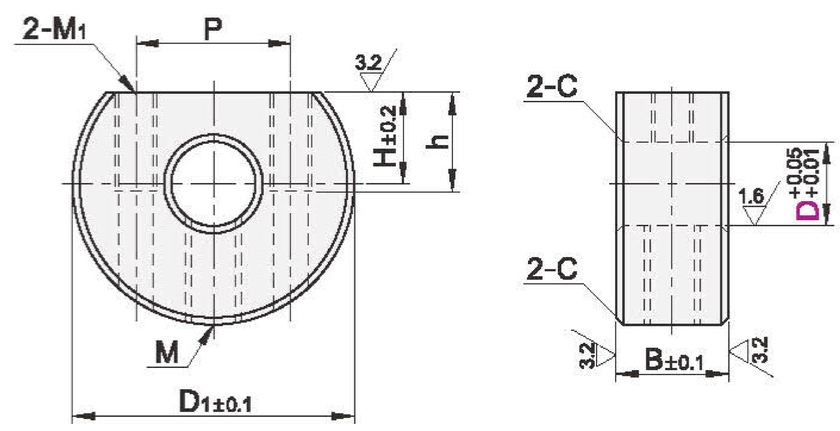

Locked by Set Screws

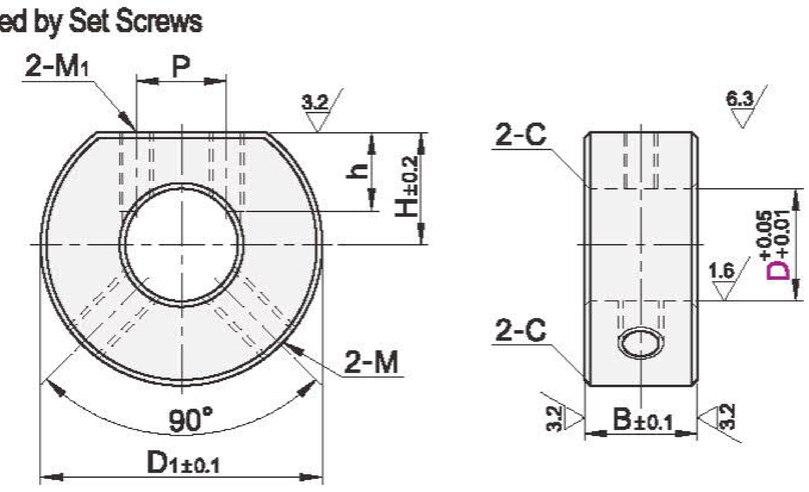

Open type

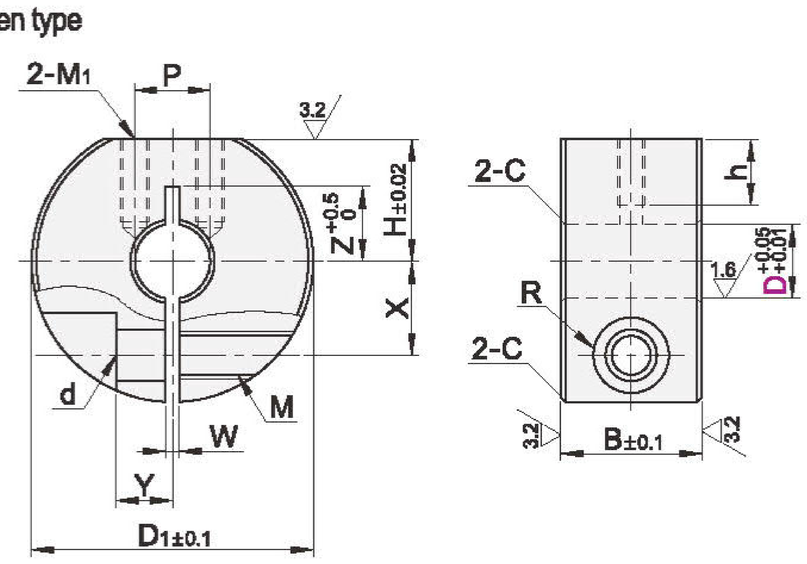

Detachable Type

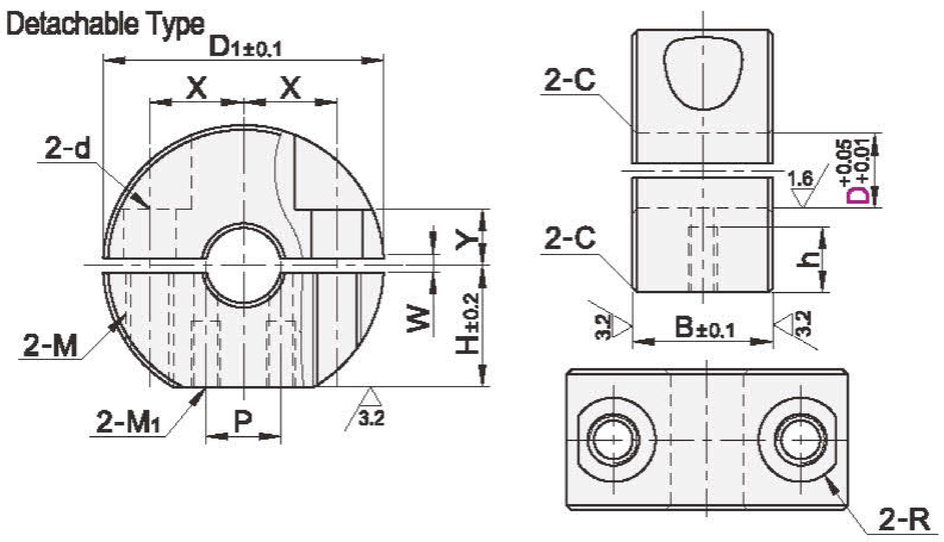

Locked by Set Screws

Model ❶Code	❷D	B	D1	H	M1	P	h	C	Setscrew M× Length
UDDAP UDDAQ UDDAR	6		20	6.5		11			
	8	8	22	7	M3	13	7		M4×4
	10		25	10		8			
	12		28	11				0.5	
	15	10	30	12.5	M4	10	5		M5×6
	20		35	15					
	25	12	42	18	M5	12	6		M6×6
	30		45	20			5	1	

! D6~12 The effective threaded depth for specification M1 is 7 (with through-hole for the bottom hole), and the rest are fully threaded.

Open type/Detachable Type

Model ❶Code	❷D	B	D1	M	d	R	H	M1	P	h	W	X	Y	Z	C
Open type UDDBP UDDBQ UDDBR UDDBU	8		30				13	M3	8			10		8	
	10			M5	5.5	4.5							6		
	12		35				15	M4	10	7		11.5		10	
	13														
	15		40				17		12		1.5	13		12	0.5
	16	15											8		
	18		45				18.5	M5	15	9		15		—	
Detachable Type UDDCP UDDCQ UDDCR UDDCU	20			M6	7	6								13	
	25		50				21		20			18	10	16	
	30		55				23.5		21	10		20		18	
	35		60				26	M6	23		2.0	23	12		
	40	18	70	M8	9	7	30		26	12		26	13	—	1
	50	22	85	M10	11	9	37	M8	28	13	3.0	32	16		

! D8~D15 S45C Material for Specification, The effective threaded depth for specification M1 is 7 (with through-hole for the bottom hole), and the rest are fully threaded.

! D8~D12、D15~D18 SUS30 Material for Specification, The effective threaded depth for specification M1 is 7 (with through-hole for the bottom hole), and the rest are fully threaded.

! S45C、SUS304仅D8~13 Specification with Opening Machining

www.fh-fa.com ⋙ Self-service selection / Free 2D-3D drawing downloads
Reduce purchasing costs! Reduce design time by more than 60%!