Bearing Locking Collar ▸ Standard Type • Long/Short Pressure Ring Type Compact Type • Long/Short Pressure Ring Type

Locked by Set Screws

Please order according to the diagram

❶~❸ Select the type and parameters in the order of for ordering

Standard Type

Model(❶Code)	—	❷D	—	❸S
UEACP	—	D3	—	S5

Compact Type

Model(❶Code)	—	❷D	—	❸S
UEBCP	—	D4	—	S7

Price Excluding Tax (Yuan)

Discounted Price

Quantity	1~9	10~
Price	100%	Separate Quotation

Custom-made / Inventory

Code				Material		Surface Treatment	Accessories
Standard Type		Compact Type		International	Equivalent		
Short Pressure Ring Type	Long Pressure Ring Type	Short Pressure Ring Type	Long Pressure Ring Type				
UEACP	UEADP	UEBCP	UEBDP	45	S45C	Black Oxide Finish	2 Set Screw Lock
UEACQ	UEADQ	UEBCQ	UEBDQ			Electroless Nickel Plating	2 Set Screw Lock (Stainless Steel)
UEACR	UEADR	UEBCR	UEBDR	0Cr18Ni9	SUS304	—	
UEACS	UEADS	—	—	LY11	A2017	Black Oxide Finish	
UEACT	UEADT					Electroless Nickel Plating	2 Set Screw Lock

If rust prevention is required, stainless steel material or electroless nickel plating products are preferred

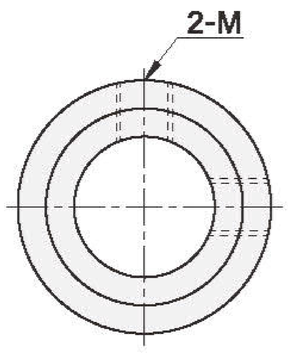

Standard Type • Short Pressure Ring Type

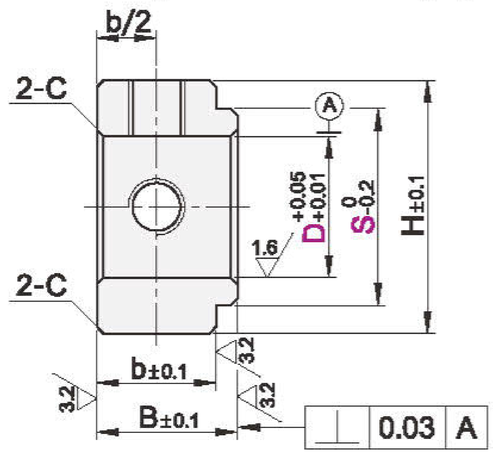

Standard Type • Long Pressure Ring Type

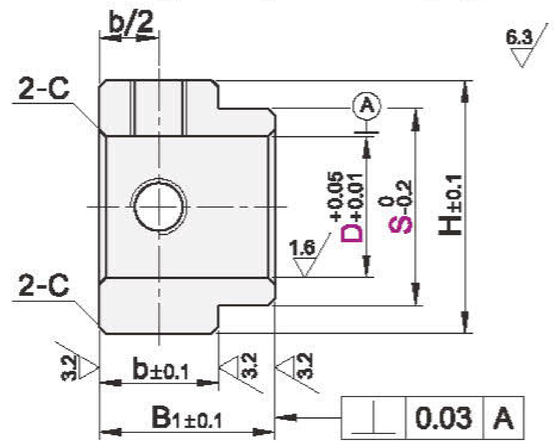

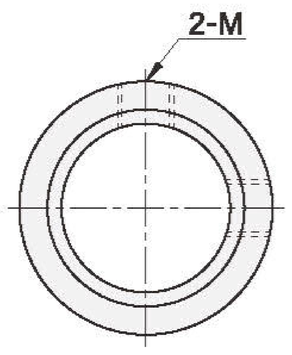

Compact Type • Short Pressure Ring Type

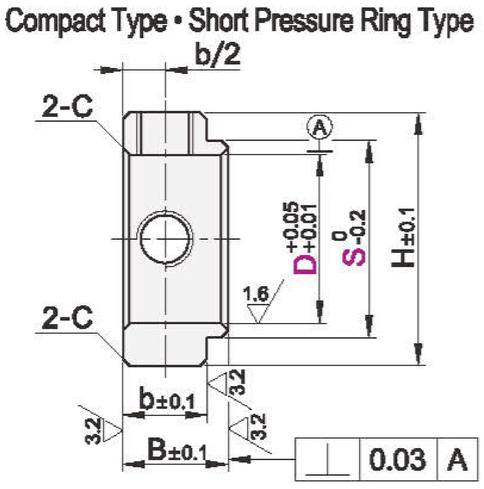

Compact Type • Long Pressure Ring Type

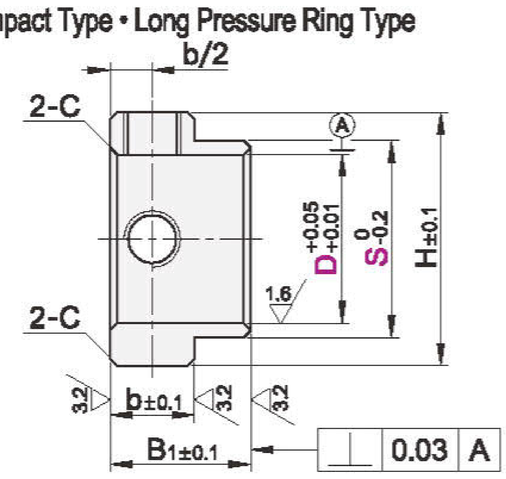

Standard Type

Model ❶Code	❷D	❸S	Applicable Bearing (Outer Diameter)	B	B1	H	Setscrew M×Length	b	C
Short Pressure Ring Type UEACP UEACQ UEACR UEACS UEACT	3	5	673ZZ(6)·683ZZ(7)	8	11	10	M3×3	7	0.3
		6	693ZZ(8)·603ZZ(9)·623ZZ(10)						
	4	6	674ZZ(7)·684ZZ(9)			12			
		7	694ZZ(11)·604ZZ(12)·624ZZ(13)						
	5	7	675ZZ(7)			14	M4×3		
		8	685ZZ(11)·695ZZ(13)·605ZZ(14)·625ZZ(16)						
	6	8	676ZZ(10)·686ZZ(13)			15			
		9	676ZZ(15)·606ZZ(17)·626ZZ(19)						
	8	11	678ZZ(12)·688ZZ(16)			16			
		12	698ZZ(19)·608ZZ(22)·628ZZ(24)						
	10	13	6800ZZ(19)			18			
		14	6900ZZ(22)·6000ZZ(26)						
		16	6200ZZ(30)·6300ZZ(35)			20			
Long Pressure Ring Type UEADP UEADQ UEADR UEADS UEADT	12	15	6801ZZ(21)	10	12.5	22	M5×4	8.5	
		16	6901ZZ(24)·6001ZZ(28)						
		18	6201ZZ(32)·6301ZZ(37)						
	15	18	6802ZZ(24)·6902ZZ(28)			25			
		19	6002ZZ(32)						
		21	6202ZZ(35)·6302ZZ(42)						
	17	20	6803ZZ(26)	–		27			
		21	6903ZZ(30)·6003ZZ(35)						
		23	6203ZZ(40)·6303ZZ(47)						
	20	23	6704ZZ(27)·6804ZZ(32)	12	15	32	M6×5	10	0.5
		24	6904ZZ(37)						
		27	6004ZZ(42)·6204ZZ(47)						
	25	28	6805ZZ(37)			42			
		29	6905ZZ(42)						
		31	6005ZZ(47)						
		32	6205ZZ(52)						
	30	33	6806ZZ(42)	15.5	19	45	M8×6	13	
		35	6906ZZ(47)						
		38	6006ZZ(55)·6206ZZ(62)·6306ZZ(72)						
	35	38	6807ZZ(47)	–		50			
		41	6907ZZ(55)						
		43	6007ZZ(62)·6207ZZ(72)						
	40	43	6808ZZ(52)		21	60	M10×8	15	
		45	6908ZZ(62)						
		48	6008ZZ(68)·6208ZZ(80)						

Compact Type

Model ❶Code	❷D	❸S	Applicable Bearing (Outer Diameter)	B	B1	H	Setscrew M×Length	b	C
Short Pressure Ring Type UEBCP UEBCQ UEBCR	4	7	674ZZ(7)·684ZZ(9)·694ZZ(11)·604ZZ(12)·624ZZ(13)	6	9	10	M3×3	5	0.3
	5	8	675ZZ(8)·695ZZ(13)·605ZZ(14)·625ZZ(16)			12			
	6	9	676ZZ(10)·686ZZ(13)·696ZZ(15)·606ZZ(17)·626ZZ(19)			13			
	8	12	678ZZ(12)·688ZZ(16)·698ZZ(19)·608ZZ(22)·628ZZ(24)			15			
	10	13	6800ZZ(19)	7.5	10	17		6	
		14	6900ZZ(22)·6000ZZ(26)						
		16	6200ZZ(30)·6300ZZ(35)						
	12	15	6701ZZ(18)·6801ZZ(21)			19	M4×3		
		16	6901ZZ(24)·6001ZZ(28)						
		18	6201ZZ(32)·6301ZZ(37)						
	15	18	6802ZZ(24)·6902ZZ(28)			22			
		19	6002ZZ(32)						
		21	6202ZZ(35)·6302ZZ(42)						
Long Pressure Ring Type UEBDP UEBDQ UEBDR	17	20	6803ZZ(26)	–		24			
		21	6203ZZ(30)·6003ZZ(35)						
		23	6203ZZ(40)·6303ZZ(47)						
	20	23	6704ZZ(27)·6804ZZ(32)	8.5	12	29	M5×4	7	0.5
		24	6904ZZ(37)						
		27	6004ZZ(42)·6204ZZ(47)						
	25	29	6905ZZ(42)			34			
		31	6005ZZ(47)						
		32	6205ZZ(52)·6305ZZ(62)						
	30	35	6906ZZ(47)	10	14	41	M6×5	8	
		38	6006ZZ(55)·6206ZZ(62)·6306ZZ(72)						
	35	41	6907ZZ(55)	–		46			
		43	6007ZZ(62)·6207ZZ(72)						
	40	48	6008ZZ(68)·6208ZZ(80)		16	53	M8×5	10	