Locking Collar ▸ Open type/Cutting Type/Side Mounted Type
Internal Thread Type

Please order according to the diagram

❶~❷ Select the type and parameters in the order of for ordering

Model(❶Code)	—	❷D
UFADP		D6

Price Excluding Tax (Yuan)

Discounted Price

Quantity	1~9	10~
Price	100%	Separate Quotation

Code	Type			Locking Collar Material International	Locking Collar Material Equivalent	Locking Collar Surface Treatment	Locking Collar Material	Locking Collar Surface Treatment	Fixed threaded part Material	Fixed threaded part Surface Treatment
UFADP	Internal Thread Type	Open type	Standard Handle	45	S45C	Black Oxide Finish	Zinc Alloy	Epoxy Resin Coating	Steel	Black Oxide Finish
UFADQ						Electroless Nickel Plating				
UFADR				0Cr18Ni9	SUS304	—			Stainless Steel	—
UFAXP			Small Handle	45	S45C	Black Oxide Finish	Zinc Die Casting	Baking Finish	SUM24L	Black Chromate Finish
UFAXQ						Electroless Nickel Plating				
UFAXR				0Cr18Ni9	SUS304	—			SUS303	—
UFBDP		Cutting Type	Standard Handle	45	S45C	Black Oxide Finish	Zinc Alloy	Epoxy Resin Coating	Steel	Black Oxide Finish
UFBDQ						Electroless Nickel Plating				
UFBDR				0Cr18Ni9	SUS304	—			Stainless Steel	—
UFBXP			Small Handle	45	S45C	Black Oxide Finish	Zinc Die Casting	Baking Finish	SUM24L	Black Chromate Finish
UFBXQ						Electroless Nickel Plating				
UFBXR				0Cr18Ni9	SUS304	—			SUS303	—
UFCDP		Side Mounted Type	Standard Handle	45	S45C	Black Oxide Finish	Zinc Alloy	Epoxy Resin Coating	Steel	Black Oxide Finish
UFCDQ						Electroless Nickel Plating				
UFCDR				0Cr18Ni9	SUS304	—			Stainless Steel	—
UFCXP			Small Handle	45	S45C	Black Oxide Finish	Zinc Die Casting	Baking Finish	SUM24L	Black Chromate Finish
UFCXQ						Electroless Nickel Plating				
UFCXR				0Cr18Ni9	SUS304	—			SUS303	—

❗ If rust prevention is required, stainless steel material or electroless nickel plating products are preferred

Open type
Standard Handle

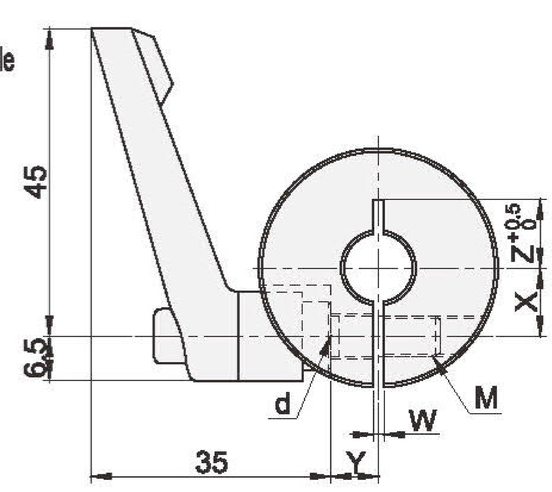

Small Handle

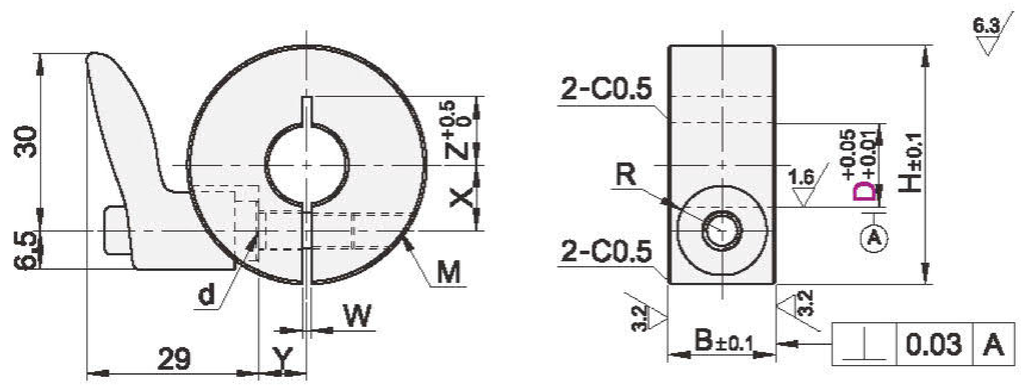

Cutting Type
Standard Handle

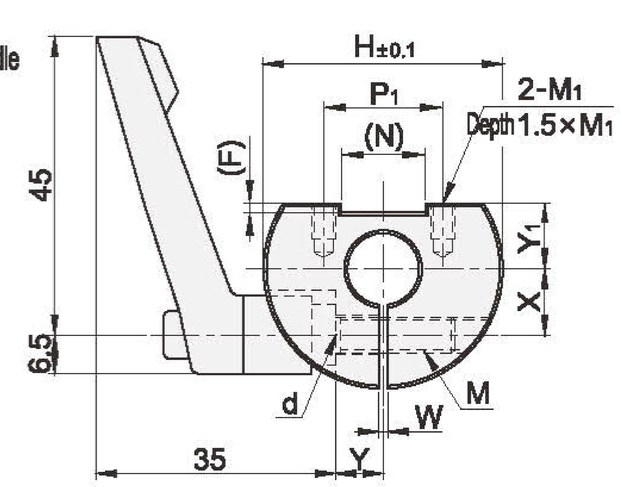

Small Handle

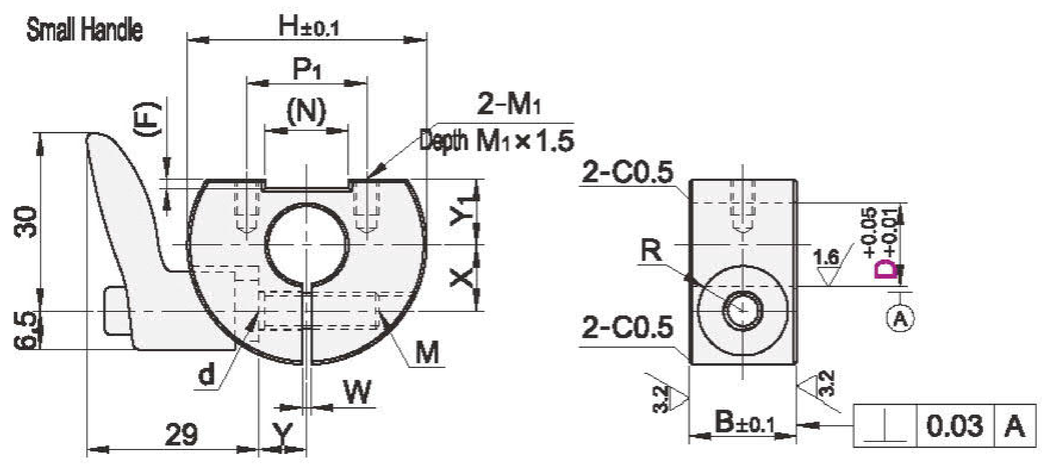

Side Mounted Type
Standard Handle

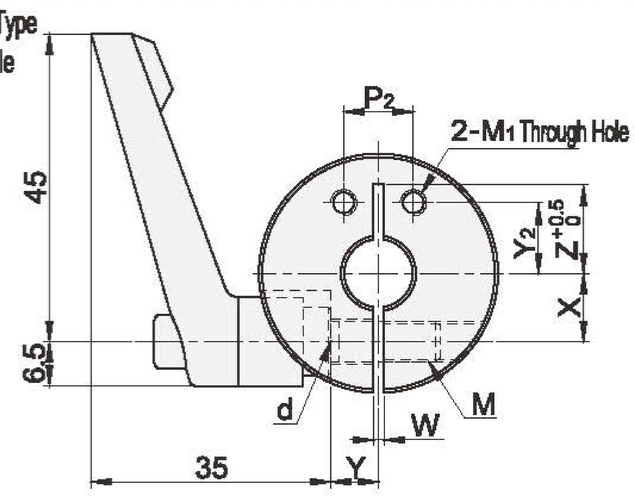

Small Handle

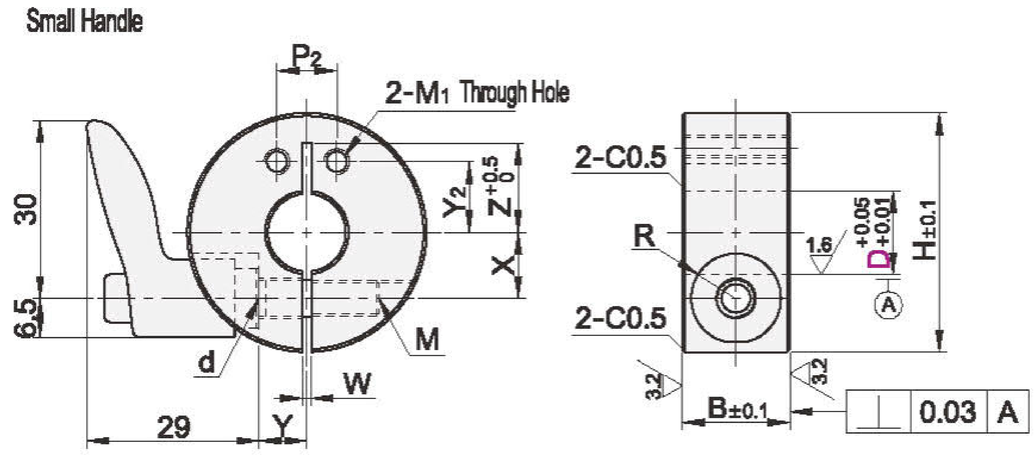

Model ❶Code: Open type Standard Handle	Cutting Type Standard Handle	Side Mounted Type Standard Handle	❷D	Handle Color	B	H	M	M1	d	P1	P2	(F)	(N)	Y1	Y2	R	W	X	Y	(Z)
			6	Handle Color	18	35	M6	M3	6.6	15	8	1.5	10	7	8	7.5	1.5	10	7	13~15
			8								10			8	10					
			10					M4					9	9.5						10~13
UFADP	UFBDP	UFCDP	12	M Orange		40				20			14	11				11	8	13~15
UFADQ	UFBDQ	UFCDQ	15	B Black		44		M5		23	12		15	13	12			13	10	16~17
UFADR	UFBDR	UFCDR	16	S Silver										14						15~16
Small Handle UFAXP	Small Handle UFBXP	Small Handle UFCXP	20			48				26	14		18	16	14			15	12	17~18
UFAXQ	UFBXQ	UFCXQ																		
UFAXR	UFBXR	UFCXR	25			60				30	16		22	19.5	21			18	18	22~24
			30			70		M6		35	20		25	23	25			21	23	26~28

❗ D25、D30 Tolerance of Specification's H Dimension is ±0.3.

❗ D30 Chamfer of Inner and Outer Perimeter for Specification C1.0