Oil-free Bushings ▸ Straight Cylinder Type·Inner Diameter F7, Outer Diameter m6/Inner Diameter E7, Outer Diameter r6 Shoulder Type·Inner Diameter F7, Outer Diameter r6

Please order according to the diagram

❶~❸ Select the type and parameters in the order of for ordering

Straight Cylinder Type

Model (❶Code)	–	❷d	–	❸L
GVAEO	–	d5	–	L10

Price Excluding Tax (Yuan)

Discounted Price

Quantity	1~9	10~
Price	100%	Separate Quotation

Straight Cylinder Type

Code	Type	Material	Inner Diameter Tolerance	Outer Diameter Tolerance	Heat Resistance Temperature
GVAEO	Straight Cylinder Type	Special Bronze	F7	m6	-30 ~ 150℃
GVAFP			E7	r6	

Please lubricate regularly during use.

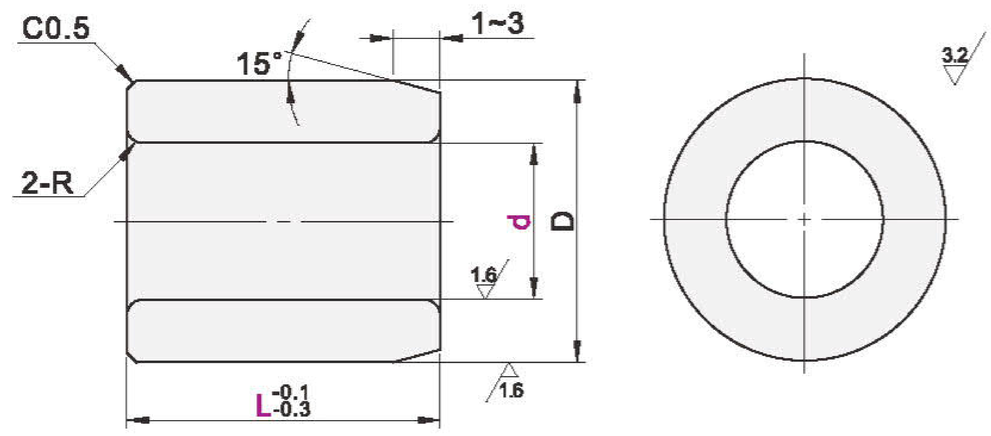

The diameter tolerance of the fixing seat matching this product is H7; the shaft diameter tolerance is for reference only.

Model Code	dF7		L	Dm6		R
GVAEO	5	+0.022 +0.010	8 10 12 15 20	9	+0.015 +0.006	0.5
	6		8 10 12 15 20 25	10		
	8	+0.028 +0.013	8 10 12 15 20 25	12	+0.018 +0.007	
	10		8 10 12 15 20 25 30	14		
	12	+0.034 +0.016	10 12 15 20 25 30	18		1
	13		10 12 15 20 25 30 40	19		
	15		10 12 15 20 25 30 40 50	21	+0.021 +0.008	
	16		10 12 15 20 25 30 40 50	22		
	20	+0.041 +0.020	15 20 25 30 40 50	28		1.5
	25		15 20 25 30 40 50 60	33	+0.025 +0.009	
	30		20 25 30 40 50 60	38		

Model Code	dE7		L	Dr6		R
GVAFP	5	+0.032 +0.020	8 10 12 15 20 25	9	+0.028 +0.019	0.5
	6		8 10 12 15 20 25	10		
	8	+0.040 +0.025	8 10 12 15 20 25	12	+0.034 +0.023	
	10		8 10 12 15 20 25	14		
	12	+0.050 +0.032	10 12 15 20 25 30	18		1
	13		10 12 15 20 25 30	19		
	15		10 12 15 20 25 30 40	21	+0.041 +0.028	
	16		10 12 15 20 25 30 40 50	22		
	20	+0.061 +0.040	12 15 20 25 30 40 50 60	28		1.5
	25		15 20 25 30 40 50 60	33	+0.050 +0.034	
	30		20 25 30 40 50 60	38		

Shoulder Type

Code	Type	Material	Inner Diameter Tolerance	Outer Diameter Tolerance	Heat Resistance Temperature
GVBGQ	Shoulder Type	Special Bronze	E7	r6	-30 ~ 150℃

Please lubricate regularly during use.

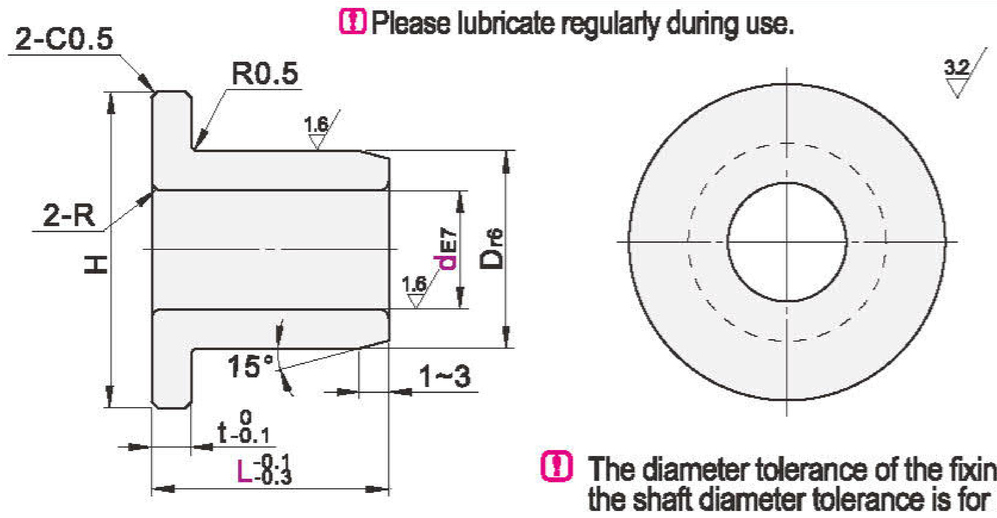

The diameter tolerance of the fixing seat matching this product is H7; the shaft diameter tolerance is for reference only.

Model Code	dE7		L	Dr6		H	t	R
GVBGQ	5	+0.032 +0.020	10 12 15	9	+0.028 +0.019	14	2	0.5
	6		10 12 15 20	10		16		
	8	+0.040 +0.025	10 12 15 20	12	+0.034 +0.023	20		
	10		10 12 15 20 25 30	14		22		
	12	+0.050 +0.032	10 12 15 20 25 30	18		25	3	1
	13		10 12 15 20 25 30	19		26		
	15		10 12 15 20 25 30	21	+0.041 +0.028	28		
	16		12 15 20 25 30 40	22		29		1.5
	20	+0.061 +0.040	12 15 20 25 30 40 50	30		40	5	2
	25		20 25 30 40 50	35	+0.050 +0.034	45		
	30		25 30 40 50	40		50		