Straight Cylinder Oil-free Bushing ▸ Standard Type/Thin-wall Type·Inner Diameter G6, Outer Diameter m6/Inner Diameter G6, Outer Diameter h6 Oil Groove Type·Inner Diameter F7, Outer Diameter m6

Please order according to the diagram

❶~❸ Select the type and parameters in the order of for ordering

Standard Type/Thin-wall Type

Model (❶Code)	–	❷d	–	❸L
GWOEP	–	d10	–	L12

Price Excluding Tax (Yuan)

Discounted Price

Quantity	1~9	10~
Price	100%	Separate Quotation

Standard Type/Thin-wall Type

Code	Type		Material	Inner Diameter Tolerance	Outer Diameter Tolerance
GWOEP	Straight Cylinder Type	Standard Type	High-strength Brass (SP2) Embedded with Solid Lubricant	G6	m6
GWOFQ				G6	h6
GWOGR		Thin-wall Type		G6	m6

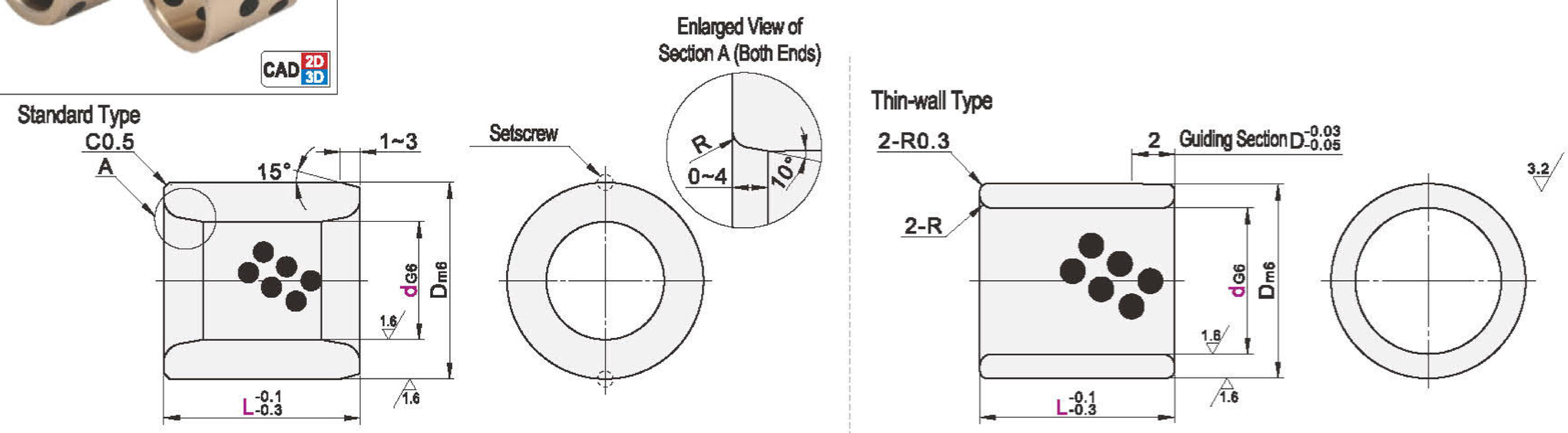

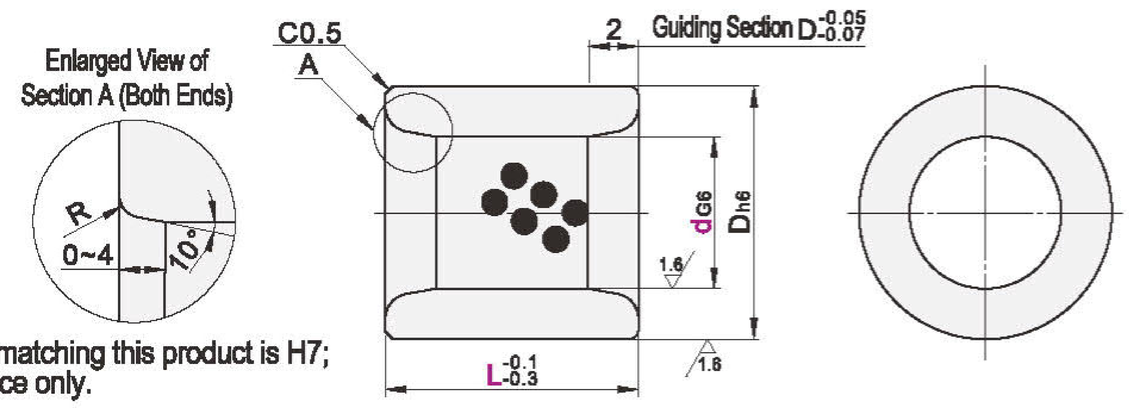

The diameter tolerance of the fixing seat matching this product is H7; the shaft diameter tolerance is for reference only.

	dG6		L	GWOEP Dm6		R	Setscrew	GWOGR Dm6		R	GWOFQ Dh6		R
Standard Type GWOEP GWOFQ Thin-wall Type GWOGR	5	+0.012 +0.004	8 10 12 15 16	9	+0.015 +0.006	0.5	M4×8	7	+0.015 +0.006	0.3	—	—	0.5
	6		8 10 12 15 16 20	10				8			10	0 -0.009	
	8	+0.014 +0.005	10 12 15 16 20 25	12	+0.018 +0.007			10			12	0 -0.011	
	10		10 12 15 16 20 25	14				12	+0.018 +0.007	0.4	14		
	12	+0.017 +0.006	10 12 15 16 20 25 30	18		1		15			18		1
	13		10 12 15 16 20 25 30	19	+0.021 +0.008			16			19	0 -0.013	
	15		10 12 15 16 20 25 30	21				18			21		
	16		10 12 15 16 20 25 30 40	22				20	+0.021 +0.008	0.5	22		
	20	+0.020 +0.007	12 15 16 20 25 30 40	28		1.5	M5×8	24			28		1.5
	25		12 15 16 20 25 30 40	33	+0.025 +0.009			29			33	0 -0.016	
	30		15 16 20 25 30 40	38				34	+0.025 +0.009		38		

Oil Groove Type

Code	Type		Material	Inner Diameter Tolerance	Outer Diameter Tolerance
GWOHS	Straight Cylinder Type	Oil Groove Type	High-strength Brass (SP2) Embedded with Solid Lubricant	F7	m6

The diameter tolerance of the fixing seat matching this product is H7; the shaft diameter tolerance is for reference only.

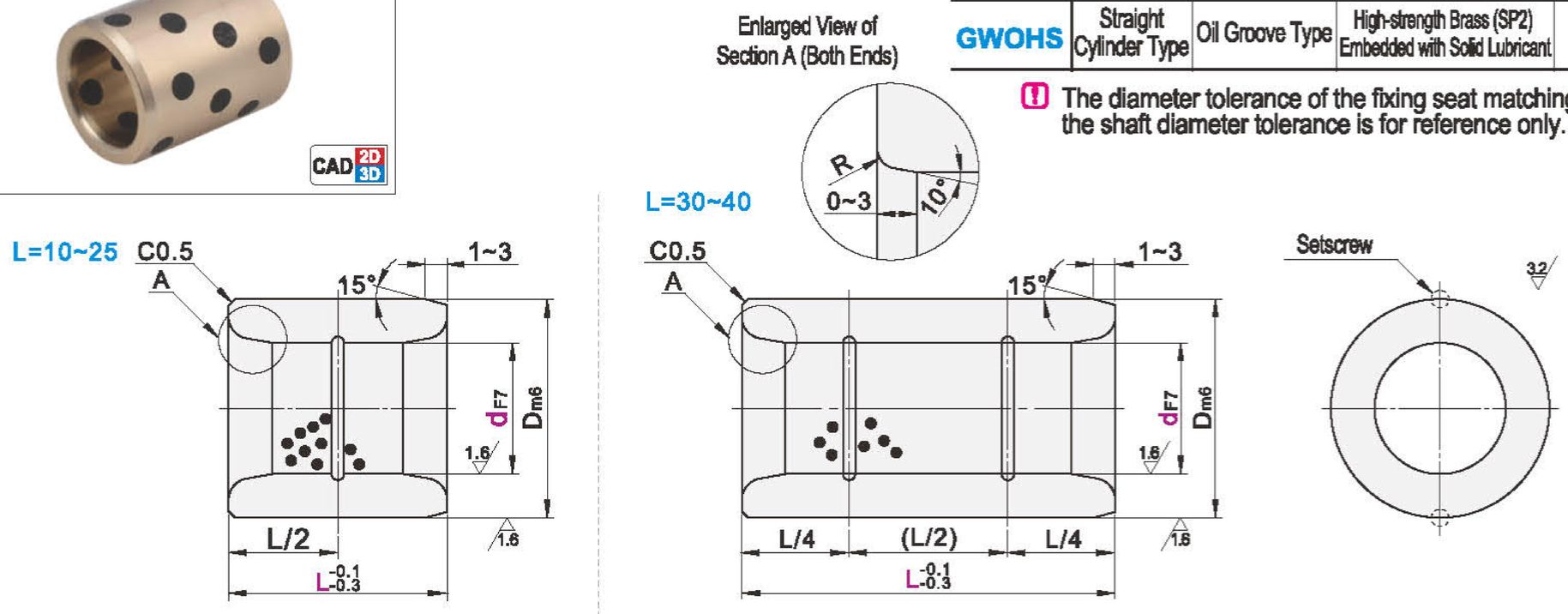

	dF7		L Single Groove	L Double Groove	Dm6		R	Setscrew
GWOHS	10	+0.028 +0.013	10 12 15 16 20		14	+0.018 +0.007	0.5	M4×8
	12		10 12 15 16 20	—	18			
	13	+0.034 +0.016	10 12 15 16 20 25		19	+0.021 +0.008	1	
	15		12 15 16 20 25		21			
	16		12 15 16 20 25	30 40	22			
	20	+0.041 +0.020	12 15 16 20 25	30 40	28		1.5	M5×8
	25		15 16 20 25	30 40	33	+0.025 +0.009		
	30		16 20 25	30 40	38			