Flange-type Oil-free Bushing ▸ Guiding Section/Intermediate Type·Inner Diameter F7/Outer Diameter h7

Copper Alloy

Please order according to the diagram

❶~❸ Select the type and parameters in the order of for ordering

Model (❶Code)	–	❷d	–	❸L
GWRTD	–	d10	–	L20

Price Excluding Tax (Yuan)

Discounted Price

Quantity	1~9	10~
Price	100%	Separate Quotation

Code	Type		Material	Inner Diameter Tolerance	Outer Diameter Tolerance
GWRTD	Guiding Section	Round Flange Type	High-strength Brass (SP2) Embedded with Solid Lubricant	F7	h7
GWRUE		Opposite Edge Flange Type			
GWRVF	Intermediate Type	Round Flange Type			
GWRWG		Opposite Edge Flange Type			

Guiding Section

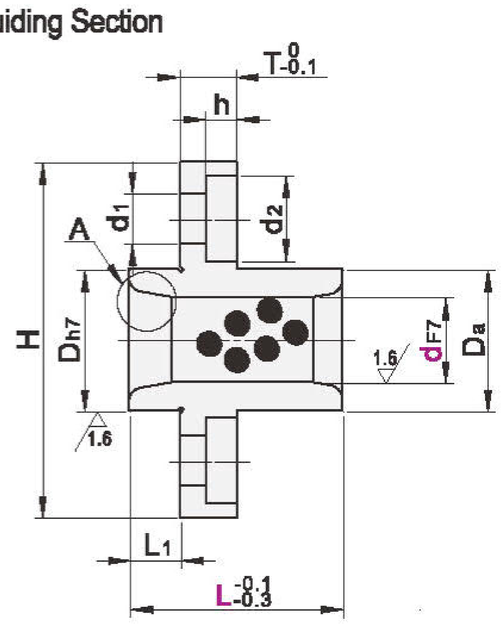

Intermediate Type

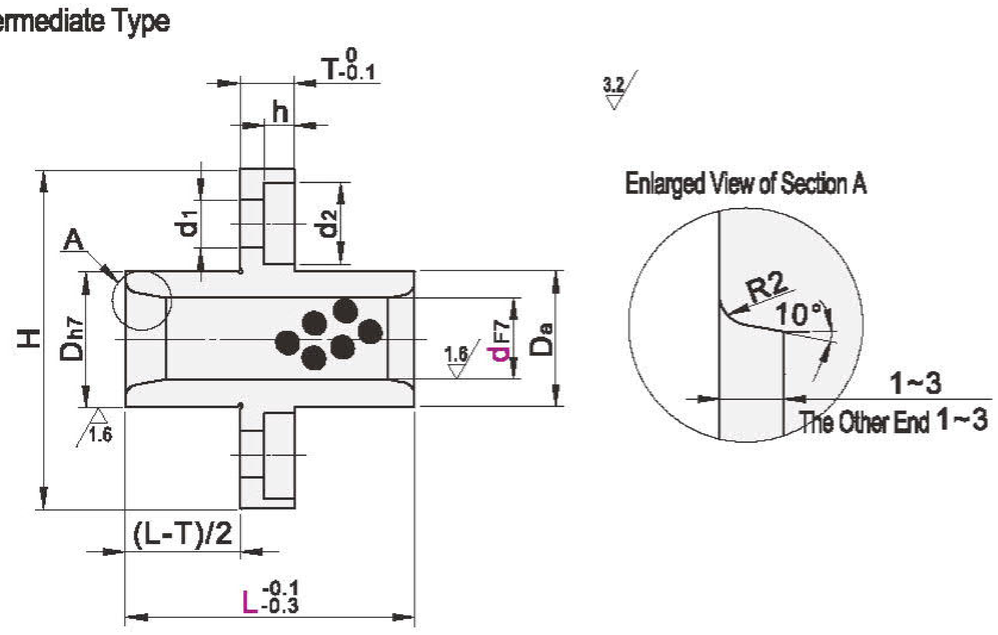

Round Flange Type
d=8~13

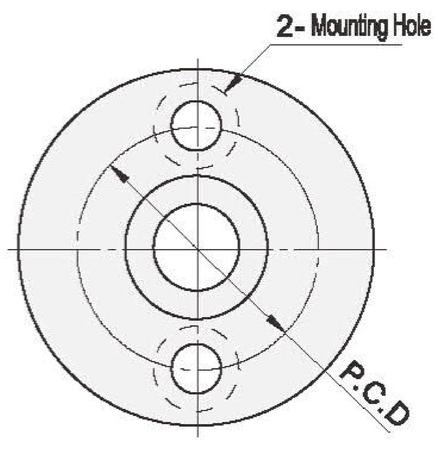

Round Flange Type
d=16~50

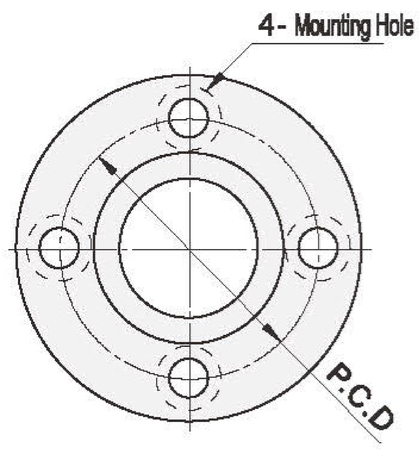

Opposite Edge Flange Type
d=8~13

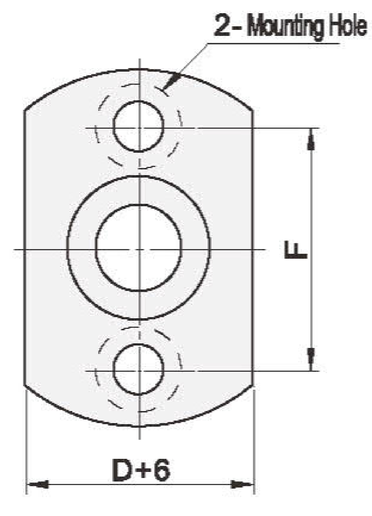

Opposite Edge Flange Type
d=16~50

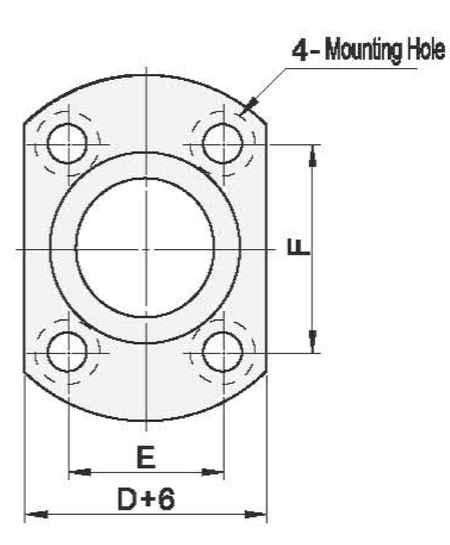

The diameter tolerance of the fixing seat matching this product is H7; the shaft diameter tolerance is for reference only.

Model Code	dF7		L	Dh7		Da	L1	H	T	h	d1	d2	P.C.D	E	F	Applicable for Thin Cylindrical Head Screws with Hexagonal Socket (need to be purchased separately)
Guiding Section GWRTD GWRUE / Intermediate Type GWRVF GWRWG	8	+0.028 +0.013	20 25 30	12	0 -0.018	11.5	5	27	4	2.3	3.3	6	19	—	19	M3×10(2个)
	10		20 25 30	14		13.5		29					21		21	
	12	+0.034 +0.016	20 25 30 35	18		17.5	6	36	5	3	4.3	7.5	26		26	M4×12(2个)
	13		25 30 35 40	19		18.5		37					27		27	
	16		25 30 35 40 50	22	0 -0.021	21.5		40					30	18	24	M4×12(4个)
	20	+0.041 +0.020	30 35 40 50 60	28		27.5	8	49	6	3.7	5.3	9	38	22	31	M5×16(4个)
	25		30 35 40 50 60 70	33		32.5		54					43	25	35	
	30		30 35 40 50 60 70	38	0 -0.025	37.5	10	63	8	4.3	6.3	11	50	30	40	M6×20(4个)
	35	+0.050 +0.025	40 50 60 70	44		43.5		69					56	36	43	
	40		50 60 70 80	50		49.5	13	82	10	5.3	8.5	14	66	38	54	M8×25(4个)
	50		60 70 80 100	62	0 -0.030	61.5		94					78	50	60	