Straight Cylinder Oil-free Bushing/Shouldered Oil-free Bushing ▶ Regular type Composite Layer Type

Please order according to the diagram

❶~❸ Select the type and parameters in the order of for ordering

Model (❶Code)	–	❷d	–	❸L
GXBMY	–	d5	–	L8

Price Excluding Tax (Yuan)

Discounted Price

Quantity	1~9	10~
Price	100%	Separate Quotation

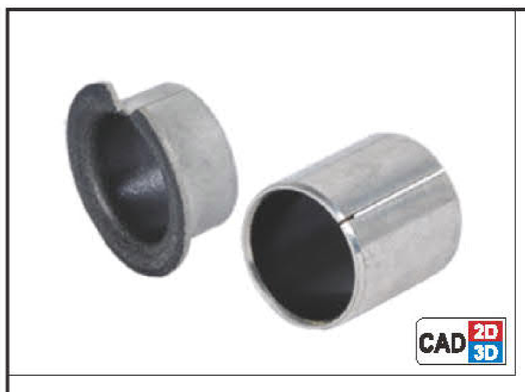

Code	Type	Material: Base Plate International	Material: Base Plate Equivalent	Material: Intermediate Layer	Material: Surface Layer	Surface Treatment	Heat Resistance Temperature
GXBMY	Straight Cylinder Type	SPCC	SPCC	Bronze Powder	Polytetrafluoroethylene (PTFE)	Tin Plating	-180~280℃
GXBNZ	Shoulder Type						

Straight Cylinder Type

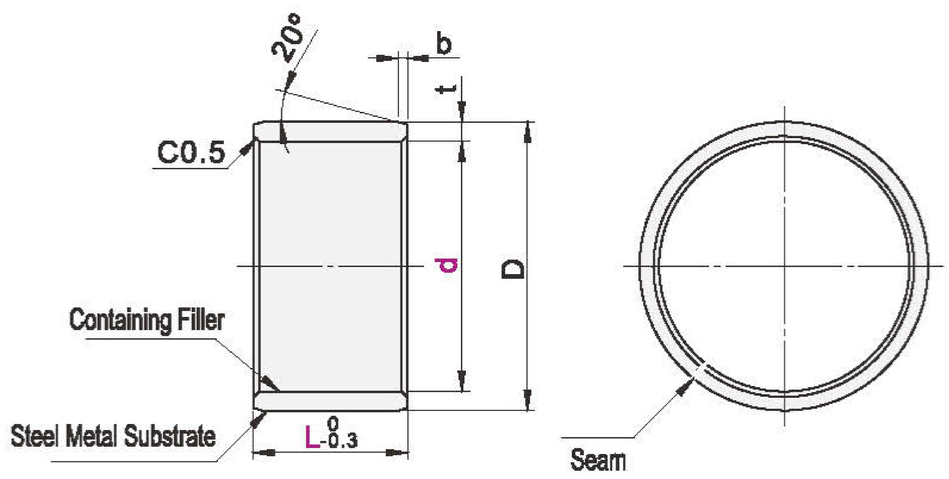

Shoulder Type

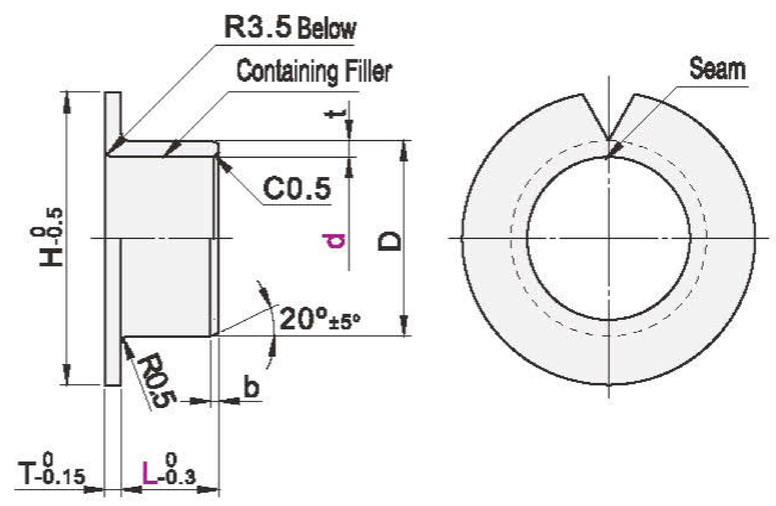

The diameter tolerance of the fixing seat matching this product is H7; the shaft diameter tolerance is for reference only.

Model Code	d	L	GXBMY D		GXBMY t		GXBMY b	GXBNZ D	GXBNZ H	GXBNZ t/T	GXBNZ t Tolerance	GXBNZ b	Shaft Diameter Reference Dimension	Shaft Diameter Tolerance	Inner Diameter Tolerance After Press-fitting
Straight Cylinder Type GXBMY / Shoulder Type GXBNZ	3	3 4 5 (6)	5	+0.047 +0.017	1.0	±0.025	0.3	4.6	7	0.8	0 -0.025	—	3	-0.025 -0.034	+0.062 0
	4	3 4 5 6 8	6					5.6	9				4		
	5	3 4 5 6 8	7	+0.055 +0.025				7	10	1.0		0.3	5	-0.025 -0.037	+0.065 0
	6	3 4 5 6 8 10 12	8					8	12				6		
	8	3 4 5 6 8 10 12 15	10					10	15				8	-0.025 -0.040	
	10	5 6 8 10 12 15 20	12	+0.060 +0.030				12	18				10		
	12	5 6 8 10 12 15 20	14					14	20				12	-0.025 -0.043	+0.068 0
	13	5 6 8 10 12 15 20	15					15	21				13		
	15	5 6 8 10 12 15 20 25 30	17	+0.065 +0.035				17	23				15		
	16	8 10 12 15 20 25 30	18	+0.070 +0.035				18	24				16		
	18	8 10 12 15 20 25 30 35	20	+0.075 +0.040				20	26				18		+0.071 0
	20	8 10 12 15 20 25 30 35	23	+0.080 +0.045	1.5	±0.030	0.5	23	31	1.5	0 -0.030	0.5	20	-0.025 -0.046	+0.081 0
	22	8 10 12 15 20 25 30 35 40	25					25	33				22		
	25	10 12 15 20 25 30 35 40 (50)	28	+0.085 +0.050				28	36				25		
	30	10 12 15 20 25 30 35 40 50	34	+0.090 +0.050	2.0		0.8	34	42	2.0		0.8	30		
	35	10 12 15 20 25 30 35 40 50	39	+0.095 +0.055				39	49				35	-0.025 -0.050	+0.085 0
	40	10 12 15 20 25 30 35 40 50 60	44					44	54				40		
	50	12 15 20 25 30 35 40 50 60	55	+0.105 +0.060	2.5	±0.040		55	65	2.5	0 -0.040		50		+0.110 0

Specifications within L( ) only apply to GXBMY straight cylinder type.

GXBMY/NZ is an open-rolled bushing, and the tolerances in the above table are reference values after pressing into the ring gauge (±0.002).

Shaft diameters are recommended sizes.