Oil-free Bushings ▸ Straight Cylinder Type/Shoulder Type Polyacetal Resin/Polytetrafluoroethylene Resin

Please order according to the diagram

❶~❸ Select the type and parameters in the order of for ordering

Polyacetal Resin

Model (❶Code)	–	❷d	–	❸L
GXFSE	–	d4	–	L6

Polytetrafluoroethylene Resin

Model (❶Code)	–	❷d	–	❸L
GXEUG	–	d4	–	L5

Price Excluding Tax (Yuan)

Discounted Price

Quantity	1~9	10~
Price	100%	Separate Quotation

Polyacetal Resin

Code	Type	Material	Heat Resistance Temperature
GXFSE	Straight Cylinder Type	Polyacetal resin containing lubricant and special fillers. The following applies	-40~80℃
GXFTF	Shoulder Type		

Straight Cylinder Type

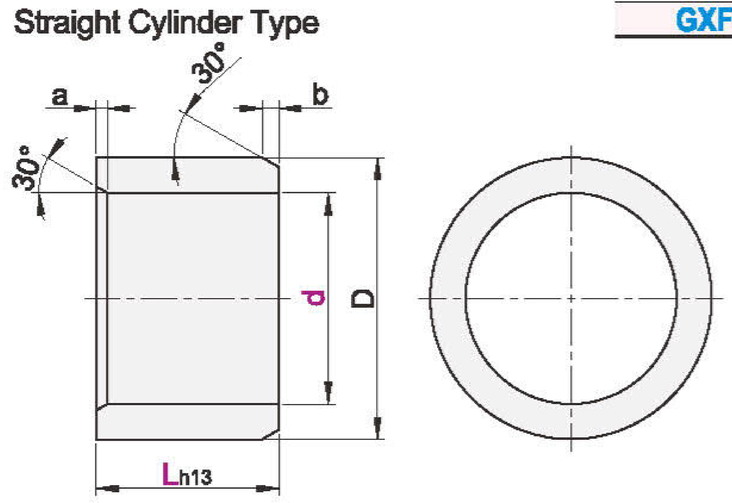

Shoulder Type

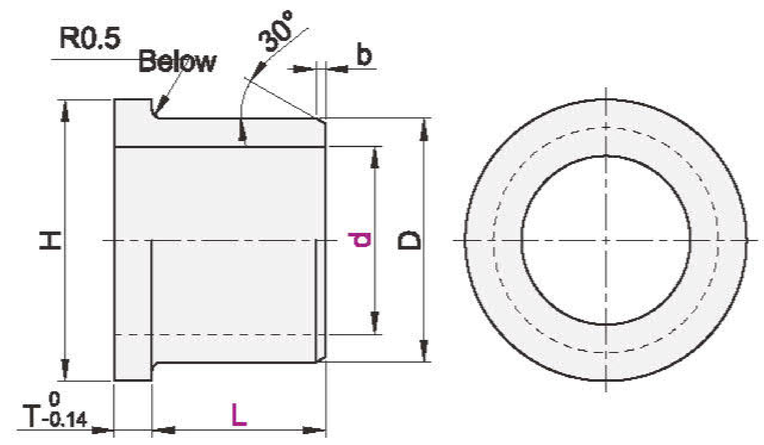

❶ This product is injection-molded, and the presence of concave points (injection molding water holes) on the surface is a normal phenomenon that does not affect usage.

❶ The diameter tolerance of the fixing seat matching this product is H7; the shaft diameter tolerance is for reference only.

Straight Cylinder Type

	d		L	D	Chamfer a	Chamfer b
GXFSE	3	+0.054 +0.014	3 5 6	4.5		0.3
	4	+0.068 +0.020	4 6 8	5.5		
	5		5 8 10 12 18	7		
	6		4 5 6 8 10 11	8		
	8	+0.083 +0.025	5 6 8 10 11 12 15	10		0.5
	10		4 5 6 8 10 12 15 18 20	12		
	10A		10 16	14		
	12	+0.102 +0.032	6 8 10 12 15 20 25 30	14	0.5	0.8
	14		8 10 12 15 20 25	16		
	15		10 12 15 17 20 25	17		
	16		10 12 15 20 25	18		
	18		15 20 25	20		
	20	+0.124 +0.040	12 15 28	22		
	20A		10 15 20 23 25 30	23		
	22		15 20 25 30	25		
	25		10 12 15 20 25 30	28		
	30		20 25 30 40	34		
	35	+0.150 +0.050	15 20 25 30 40 50	39		1.2
	40		20 30 40 50	44		
	45		30 40 50	50		
	50		10 20 30 40 50	55		

❶ The tolerance is the tolerance after pressing into a standard H7 seat hole (ISO 3547-1).

Shoulder Type

	d		L	D	H	T	Chamfer b
GXFTF	3	+0.054 +0.014	2.25 4.25	4.5	7.5	0.75	0.3
	4		2.25 5.25	5.5	9.5		
	5	+0.068 +0.020	3 4	7	11		
	6		3 4 5 7 9	8	12		
	8	+0.083 +0.025	4.5 5 6.5 8.5 9 11	10	15		
	10		4 5 6 7 8 9 11 14 16	12	18		0.5
	12		3 4 5 6 8 9 11 12 14 16 17 19	14	20	1	
	14		4.2 7 9 11 16	16	22		
	15	+0.102 +0.032	8 11 14 16 19 24	17	23		0.8
	16		11 16	18	24		
	18		11 16 19	20	26		
	20		10 15 20	23	30		
	22	+0.124 +0.040	10	25	33	1.5	
	25		10 15 20	28	35		
	30		7 14 24 30 35	34	42		
	35	+0.150 +0.050	14 24	39	47		1.2
	40		28 38	44	52	2	
	45		23 43 48	50	58		
	50		18 28 38 48	55	63		

❶ The tolerance is the tolerance after pressing into a standard H7 seat hole (ISO 3547-1).

Polytetrafluoroethylene Resin

Code	Type	Material	Heat Resistance Temperature
GXEUG	Straight Cylinder Type	Polyacetal resin containing lubricant and special fillers. The following applies	-200~200℃
GXEVH	Shoulder Type		

Straight Cylinder Type

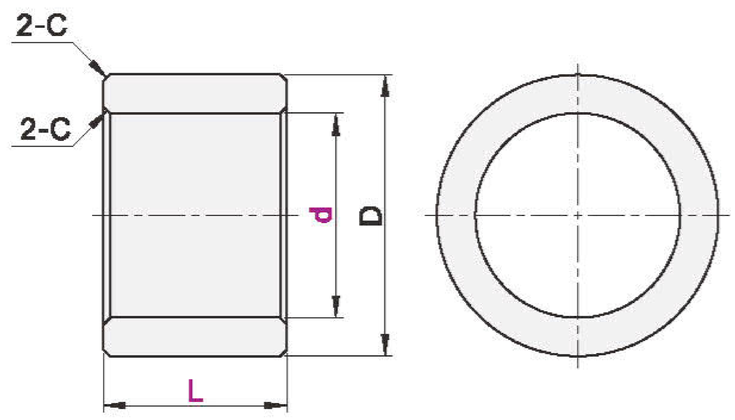

Shoulder Type

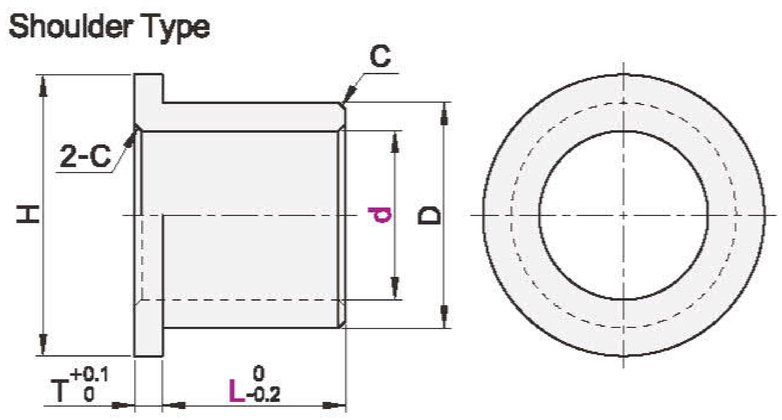

❶ The diameter tolerance of the fixing seat matching this product is H7; the shaft diameter tolerance is for reference only.

Model Code	d		L	D		Inner Diameter Tolerance After Press-fitting	H	T	C
Straight Cylinder Type GXEUG	3	+0.179 +0.129	3 5	6	+0.090 +0.040	+0.120 +0.070	9	1.5	0.3
	4		3 5 8	7		+0.122 +0.072			
	5		5 8 10	8			11		
	6	+0.182 +0.132	5 8 10	9		+0.125 +0.075	12		
Shoulder Type GXEVH	8	+0.197 +0.147	8 10 12 15	12		+0.131 +0.081	16	2	0.5
	10	+0.210 +0.160	8 10 12 15	14	+0.100 +0.050	+0.144 +0.094	18		
	12	+0.212 +0.162	10 12 15 20	16		+0.146 +0.096	20		
	16	+0.239 +0.169	12 15 20 25	22		+0.175 +0.105	28	3	
	20	+0.303 +0.183	15 20 25 30	26	+0.110 +0.060	+0.229 +0.109	32		0.8