Flange-type oil-free bushing assembly ▸ Standard type/Single collar type Sith built-in copper alloy bushing

Please order according to the diagram

❶~❷ Select the type and parameters in the order of for ordering

■ Standard type

Model (❶Code)	–	❷d
GYFHJ	–	d6

■ Single collar type

Model (❶Code)	–	❷d
GYFCP	–	d6

Price Excluding Tax (Yuan)

● Discounted Price

Quantity	1~9	10~
Price	100%	Separate Quotation

Code	Type		Fixing Seat Material	Fixing Seat Surface Treatment	Bushing Material	Seal ring
GYFHJ	Standard type	Round Flange Type	SS400	Electroless Nickel Plating	High-strength Brass (SP2) Embedded with Solid Lubricant	Absent
GYFHK						Present
GYFEL		Square Flange Type				Absent
GYFEM						Present
GYFDN		Opposite Edge Flange Type				Absent
GYFDO						Present
GYFCP	Single collar type	Round Flange Type				Absent
GYFBQ		Square Flange Type				
GYFAR		Opposite Edge Flange Type				

Standard type

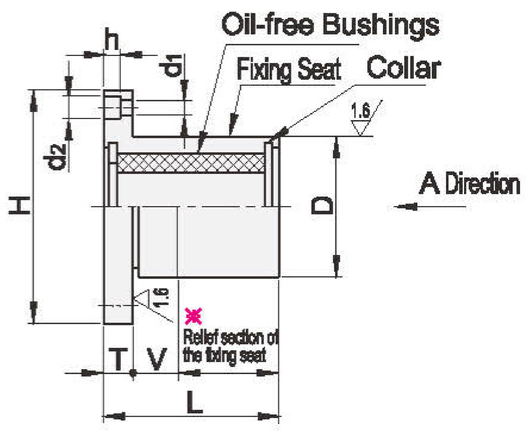

Single collar type

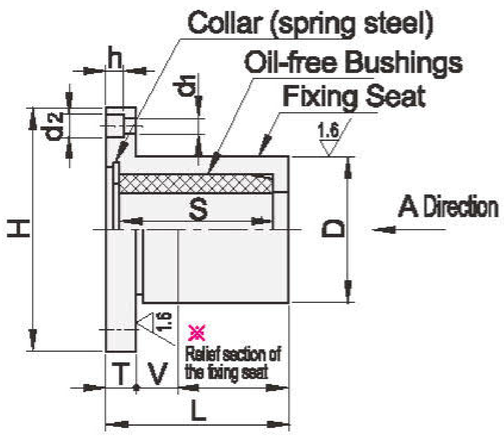

※ Tolerance for the relief section of the fixing seat(Standard type)

D≤28 When $^{-0.1}_{-0.3}$

D≥32 When $^{-0.3}_{-0.5}$

※ Tolerance for the relief section of the fixing seat(Single collar type)

D≤26 When $^{-0.1}_{-0.3}$

D≥30 When $^{-0.3}_{-0.5}$

Round Flange Type

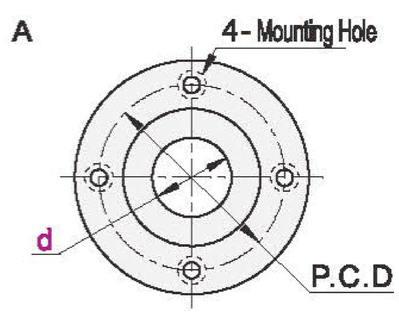

Square Flange Type

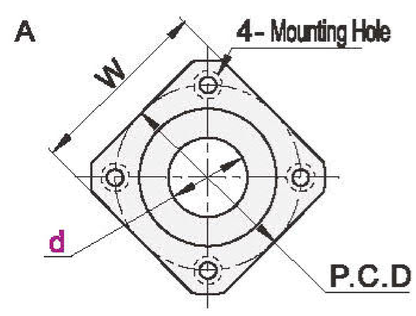

Opposite Edge Flange Type

d=6~13

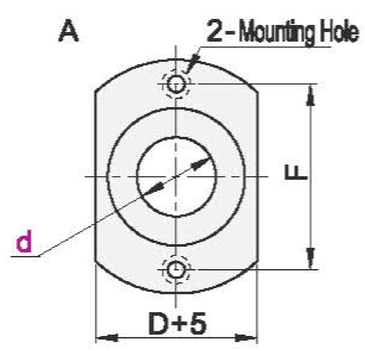

d=16~30

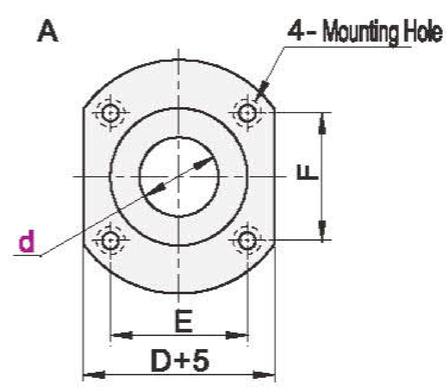

■ Standard type

Model Code	d		D		L	V	H	T	d1	d2	h	P.C.D	W	E	F
Round Flange Type / Square Flange Type / Opposite Edge Flange Type: GYFHJ GYFHK / GYFEL GYFEM / GYFDN GYFDO	6	+0.022 0	12	0 -0.018	22	6	28	5	3.3	6	3.3	20	22	—	20
	8	+0.028 0	15		27		32					24	25		24
	10		19		32		40					29	30		29
	12	+0.034 0	21	0 -0.021		11	42	6	4.3	7.5	4.3	32	32		32
	13		23				43					33	34		33
	16		28		37		48					38	37	22	31
	20	+0.041 0	32	0 -0.025	42		54	8	5.3	9	5.3	43	42	24	36
	25		40		58		62					51	50	32	40
	30		45		68		74	10	6.3	11	6.3	60	58	35	49
	(35)	+0.050 0	52	0 -0.030	68	16	82					67	64	—	—
	(40)		60		80		96	13	8.5	14	8.3	78	75		
	(50)		80		90		116					98	92		

❶ Dimension with () d is not applicable to Opposite Edge Flange Type (GYFDN/GYFDO)

■ Single collar type

Model Code	d		D		L	V	S	H	T	d1	d2	h	P.C.D	W	E	F
GYFCP GYFBQ GYFAR	6	+0.022 +0.010	15	0 -0.018	21	6	15	32	5	3.3	6	3.3	23	23	—	23
	8	+0.028 +0.013	17		26		20	34					25	25		25
	10		20		32		25	39	6	4.3	7.5	4.3	29	29		29
	12	+0.034 +0.016	24	0 -0.021		11		44					34	34		34
	13		26					46					36	36		36
	16		30		37		30	50					40	40	26	30
	20	+0.041 +0.020	36	0 -0.025	42		35	62	8	5.3	9	5.3	48	48	30	38
	25		42		57		50	68					54	54	36	40
	30		48		67		60	78	10	6.3	11	6.3	62	62	40	48