Flange-type oil-free bushing assembly ▸ Intermediate flange type / Miniature type·With threaded hole

With built-in copper alloy bushing

Please order according to the diagram

❶~❷ Select the type and parameters in the order of for ordering

Intermediate flange type

Model (❶Code)	–	❷d
GYFSC	–	d8

Miniature type. With threaded hole

Model (❶Code)	–	❷d
GYFPJ	–	d6

Price Excluding Tax (Yuan)

Discounted Price

Quantity	1~9	10~
Price	100%	Separate Quotation

Intermediate flange type

Code	Type		Fixing Seat Material	Fixing Seat Surface Treatment	Bushing Material	Seal ring
GYFSC	Intermediate flange type	Round Flange Type	SS400	Electroless Nickel Plating	High-strength Brass (SP2) Embedded with Solid Lubricant	Absent
GYFSD						Present
GYFRE		Square Flange Type				Absent
GYFRF						Present
GYFQG		Opposite Edge Flange Type				Absent
GYFQH						Present

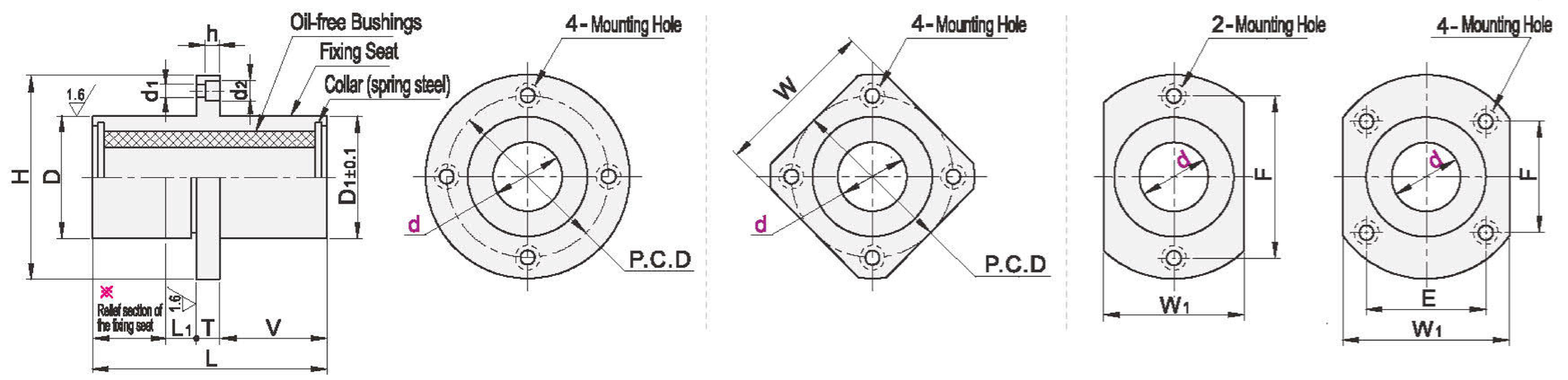

※ Tolerance for the relief section of the fixing seat

D≤28 When $^{-0.1}_{-0.3}$

D≥32 When $^{-0.3}_{-0.5}$

Model Code	d		D		D1	L	L1	V	H	T	d1	d2	h	P.C.D	W	W1	E	F
Round Flange Type GYFSC	6	+0.022 0	12	0 -0.018	11.8	37	6	16	28	5	3.3	6	3.3	20	22	17	—	20
GYFSD	8	+0.028 0	15		14.8	47		21	32					24	25	20		24
Square Flange Type GYFRE	10		19		18.8				40					29	30	24		29
GYFRF	12	+0.034 0	21	0 -0.021	20.8	57		25.5	42	6	4.3	7.5	4.3	32	32	26		32
	13		23		22.8				43					33	34	28		33
	16		28		27.8	67	11	30.5	48					38	37	33	22	31
Opposite Edge Flange Type GYFQG	20	+0.041 0	32	0 -0.025	31.6	77		34.5	54	8	5.3	9	5.3	43	42	37	24	36
GYFQH	25		40		39.6	108		50	62					51	50	45	32	40
	30		45		44.6	128		59	74	10	6.3	11	6.3	60	58	50	35	49

Miniature type. With threaded hole

Code	Type		Fixing Seat Material	Fixing Seat Surface Treatment	Bushing Material	Seal ring
GYFPJ	With threaded hole	Round Flange Type	SS400	Electroless Nickel Plating	High-strength Brass (SP2) Embedded with Solid Lubricant	Absent
GYFPK						Present

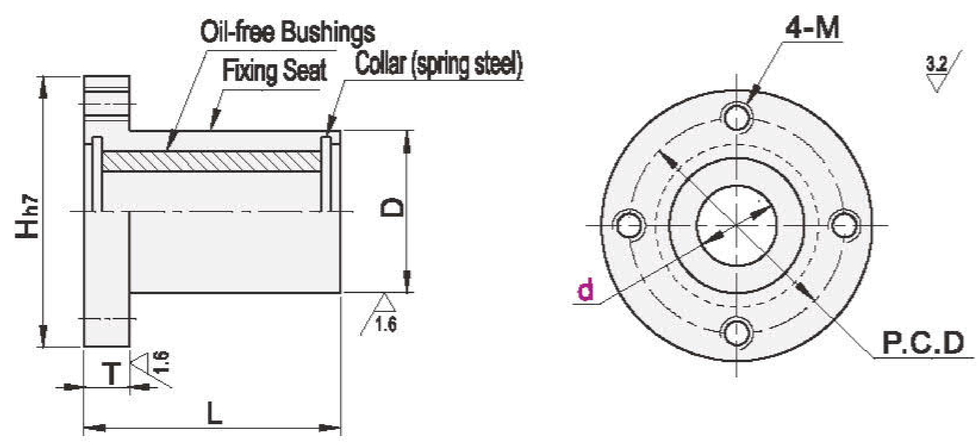

Model Code	d		D	L	Hh7	T	M	P.C.D
Without seal ring GYFPJ	6	+0.022 0	12	22	22.5	6	M3	17
	8	+0.028 0	15	27	26.5			21
	10		19	32	33.5	8	M4	26
	12	+0.034 0	21		36.5			29
With seal ring GYFPK	13		23		37.5			30
	16		28	37	42.5			35
	20	+0.041 0	32	42	47.5	10	M5	39
	25		40	58	55.5			47
	30		45	68	65.5	12	M6	55