Straight Cylindrical Linear Bearing ▶ Single Bush Type / Double Bush Type

Please order according to the diagram

❶~❷ Select the type and parameters in the order of for ordering

Single Bush Type

Model (❶Code)	–	❷d
GHBAR	–	d4

Double Bush Type

Model (❶Code)	–	❷d
GHCAY	–	d6

Price Excluding Tax (Yuan)

Discounted Price

Quantity	1~9	10~
Price	100%	Separate Quotation

Custom-made / Inventory

- Bushing and ball material are SUJ2, equivalent to GCr15.
- Cage material is resin, equivalent to DURACON M90.

! If rust prevention is required, nickel-plated products are preferred!

Code	Type	Material International	Material Equivalent	Bushing hardness	Surface Treatment	Ball Material	Cage Material	Seal Ring Material	Operating Temperature
GHBAR	Single Bush Type	GCr15	SUJ2	56HRC~	—	GCr15	Resin	No Seal Ring	-15~80°C
GHBAS								Nitrile Rubber	
GHBAT					Electroless Nickel Plating		Stainless Steel		-15~120°C
GHBBW							Resin		-15~80°C
GHBBX							Stainless Steel		-15~120°C
GHBAU		9Cr18Mo	SUS440C	54HRC~	—	9Cr18	Resin		-15~80°C
GHBAV							Stainless Steel	Stainless Steel	-15~120°C
GHCAY	Double Bush Type	GCr15	SUJ2	56HRC~	—	GCr15	Resin	No Seal Ring	-15~80°C
GHCAZ								Nitrile Rubber	
GHCAB							Stainless Steel		-15~120°C
GHCBA					Electroless Nickel Plating		Resin		-15~80°C
GHCBC							Stainless Steel		-15~120°C

Single Bush Type

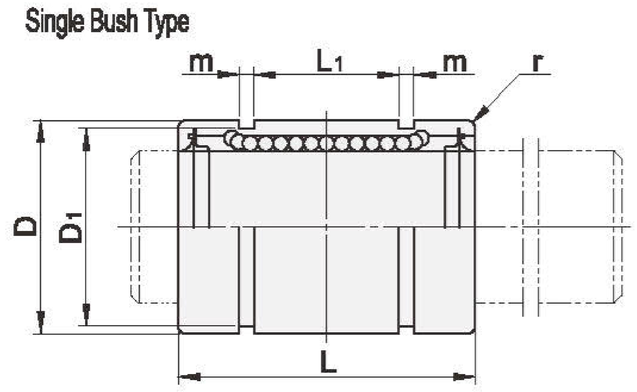

Double Bush Type

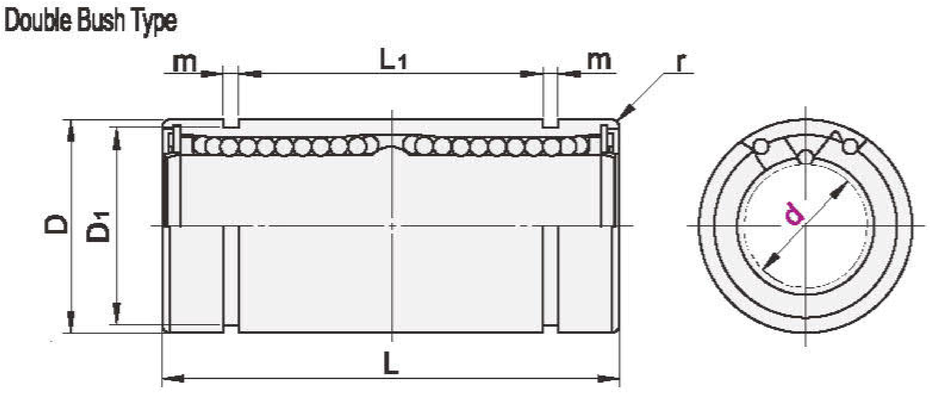

Single Bush Type

Model Code	d		D Size	D No surface treatment	D With surface treatment	L		L1		m	D1	r	Eccentricity (Max)	Number of Ball Rows	Basic Rated Load C(Dynamic) N	Basic Rated Load Co(Static) N	Weight(g)
No Seal Ring GHBAR With seal ring GHBAS GHBBW GHBAU GHBAV GHBAT GHBBX	4	0 -0.008	8	0 -0.009	0 -0.015	12	0 -0.12	—	—	—	—	0.3	0.007		85	125	1.9
	5		10			15		8			9.6				165	205	3.9
	6		12	0 -0.011	0 -0.018	19		11.3		1.1	11.5	0.4			205	260	8.3
	(8)		15			24		15.3			14.3			4	260	375	15
	(10)	0 -0.009	19			29		19.4	0 -0.4		18		0.011		370	545	30
	(12)		21	0 -0.013	0 -0.021	30	0 -0.2	20.4		1.3	20				410	595	40
	(13)		23			32					22	0.8			505	780	45
	(16)		28			37		23.3		1.6	27			5	770	1175	70
	(20)		32			42		27.3			30.5				880	1365	95
	(25)	0 -0.010	40	0 -0.016	0 -0.025	59		37.3		1.85	38		0.014		975	1565	235
	(30)		45			64		40.8			43				1565	2735	260
	35		52			70	0 -0.3	45.3	0 -0.5	2.1	49	1.5		6	1665	3135	420
	40	0 -0.012	60	0 -0.019	0 -0.030	80		56.3			57		0.019		2155	4015	650
	50		80			100		68.8		2.6	76.5				3815	7935	1695

! GHBAU/AV Only Applicable to Specifications with () GHBAT/BX Applicable Only d8~12,d16~40。 ! 1Kgf=9.81N

Double Bush Type

Model Code	d		D Size	D No surface treatment	D With surface treatment	L		L1		m	D1	r	Eccentricity (Max)	Number of Ball Rows	Basic Rated Load C(Dynamic) N	Basic Rated Load Co(Static) N	Static Allowable Moment (N/m)	Weight(g)
No Seal Ring GHCAY With seal ring GHCAZ GHCBA GHCAB GHCBC	4	0 -0.010	8	0 -0.011	0 -0.015	23	0 -0.3	—	0 -0.5	—	—	0.3	0.009	4	175	250	0.60	4.5
	5		10			28		18.2			9.6	0.4			260	410	1.35	10
	6		12	0 -0.013	0 -0.018	35		24.8		1.1	11.5		0.014		320	525	2.15	15
	8		15			45		32.8			14.3				430	780	4.30	30
	10		19			55		41.4			18				585	1095	7.20	60
	12		21	0 -0.016	0 -0.021	57		43.4		1.3	20				655	1195	10.5	75
	13		23			61					22	0.8			810	1565	11.5	85
	16		28			70		49.8		1.6	27			5	1225	2345	19.5	140
	20		32			80		57.8			30.5				1395	2735	26.5	175
	25	0 -0.012	40	0 -0.017	0 -0.025	112		78.3		1.85	38		0.019		1555	3135	43.0	435
	30		45			123		85.3			43				2485	5485	82.5	475
	35		52			135		94.8		2.1	49	1.5		6	2645	6265	105	790
	40	0 -0.015	60	0 -0.022	0 -0.030	151		116.8			57		0.024		3425	8035	145	1165
	50		80			192		142.8		2.6	76.5				6075	15895	395	2095

! GHCAB/BC Applicable Only d8~12,d16~40。 ! 1Kgf=9.81N

Example

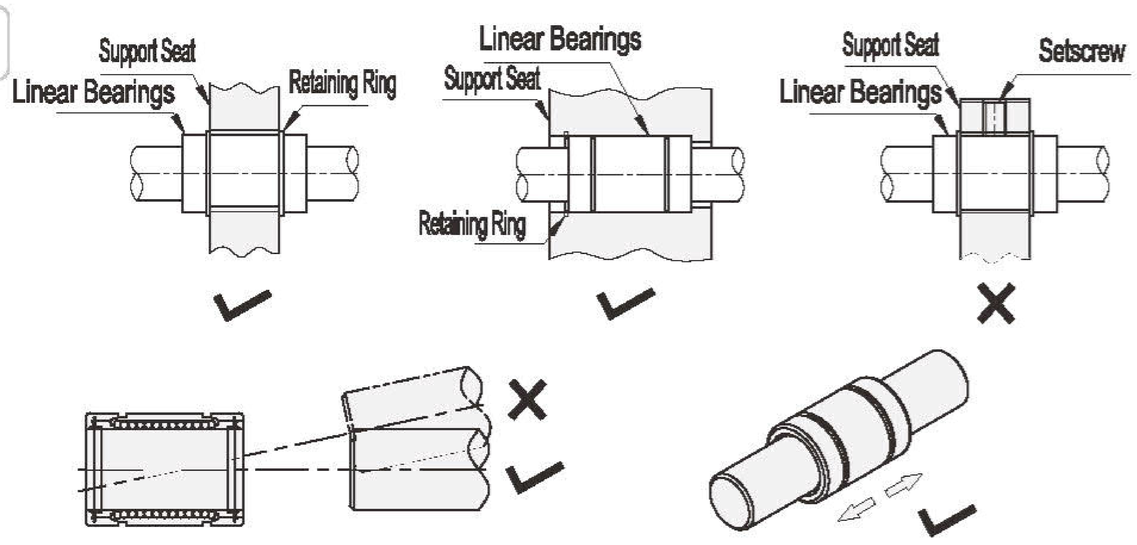

Notes for Using Linear Bearings:
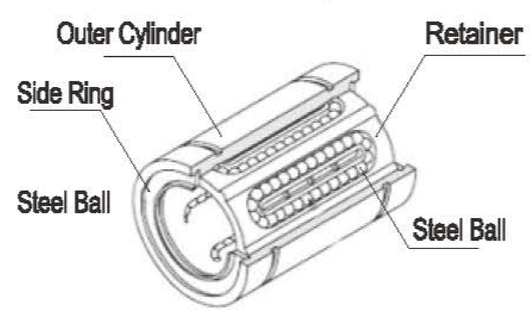
- When installing the shaft, it is essential to ensure that the shaft core is parallel to the inner bore of the linear bearing, and avoid installation at improper angles.
- When pressing the linear bearing into the bearing seat, do not directly hit the retaining ring or oil seal on the side end of the outer cylinder. A special tool should be used to press it in evenly.
- Due to its structural characteristics, the linear bearing is only suitable for linear motion and not suitable for rotational motion. Otherwise, it may affect the service life of the linear bearing and cause unexpected accidents.