# Linear Bearing with Flange ▸ Double Bush Type·Counterbore Type
## Standard Type

Please order according to the diagram

❶~❷ Select the type and parameters in the order of for ordering

| Model (❶Code) | – | ❷d |
|---|---|---|
| GJMOA | – | d6 |

Price Excluding Tax (Yuan)

Discounted Price

| Quantity | 1~9 | 10~ |
|---|---|---|
| Price | 100% | Separate Quotation |

Custom-made / Inventory

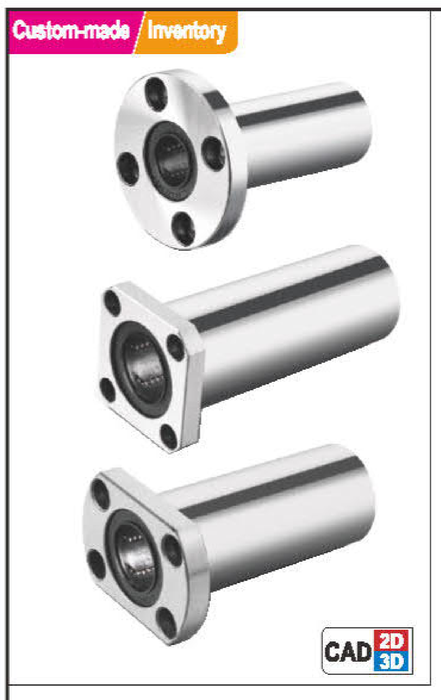


| Code | Type | | Bushing Material International | Bushing Material Equivalent | Bushing Hardness | Bushing Surface Treatment | Ball Material | Cage Material | Seal Ring Material | Operating Temperature |
|---|---|---|---|---|---|---|---|---|---|---|
| GJMOA | Double Bush Type | Round Flange Type | GCr15 | SUJ2 | 56HRC~ | — | GCr15 | Resin | No Seal Ring | -15~80°C |
| GJMOB | | | | | | | | | | |
| GJMOC | | | | | | | | Stainless Steel | | -15~120°C |
| GJMOD | | | | | | Electroless Nickel Plating | | Resin | Nitrile Rubber | -15~80°C |
| GJMOE | | | | | | | | Stainless Steel | | -15~120°C |
| GJMPO | | Square Flange Type | | | | — | | Resin | No Seal Ring | -15~80°C |
| GJMPP | | | | | | | | | | |
| GJMPQ | | | | | | | | Stainless Steel | | -15~120°C |
| GJMPR | | | | | | Electroless Nickel Plating | | Resin | Nitrile Rubber | -15~80°C |
| GJMPS | | | | | | | | Stainless Steel | | -15~120°C |
| GJMQT | | Opposite Edge Flange Type | | | | — | | Resin | No Seal Ring | -15~80°C |
| GJMQU | | | | | | | | | | |
| GJMQV | | | | | | | | Stainless Steel | Nitrile Rubber | -15~120°C |
| GJMQW | | | | | | Electroless Nickel Plating | | Resin | | -15~80°C |
| GJMQX | | | | | | | | Stainless Steel | | -15~120°C |

- Bushing and ball material are SUJ2, equivalent to GCr15.
- Cage material is resin, equivalent to DURACON M90.

❗ If rust prevention is required, nickel-plated products are preferred!

Round Flange Type

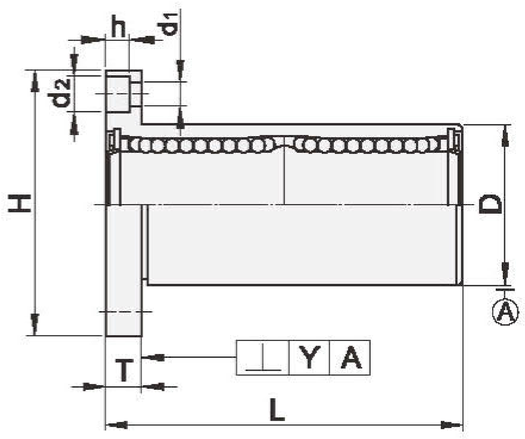


Square Flange Type

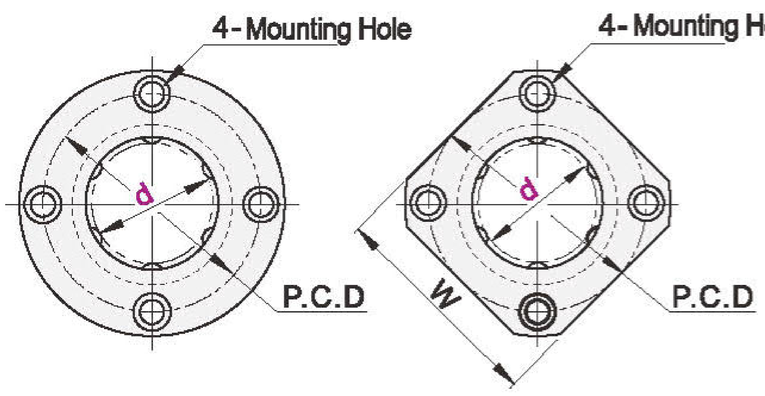


Opposite Edge Flange Type

d=6~13 d=16~50

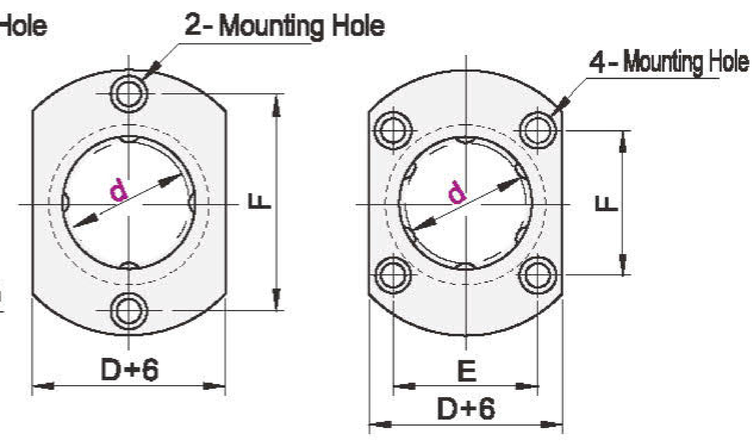


| Model Code | d | D Size | D No surface treatment | D With surface treatment | L | H | T | d1 | d2 | h | P.C.D | W | E | F | Eccentricity | Straightness Y |
|---|---|---|---|---|---|---|---|---|---|---|---|---|---|---|---|---|
| GJMOA GJMPQ GJMOB GJMPS GJMOD GJMQT GJMOC GJMQU GJMOE GJMQW GJMPO GJMQV GJMPP GJMQX GJMPR | 6* | 12 | 0 -0.013 | 0 -0.018 | 35 | 28 | 5 | 3.5 | 6 | 3.1 | 20 | 22 | — | 20 | 0.014 | 0.014 |
| | 8 | 15 | | | 45 | 32 | | | | | 24 | 25 | | 24 | | |
| | 10 | 19 | 0 -0.010 | | 55 | 40 | 6 | 4.5 | 7.5 | 4.1 | 29 | 30 | | 29 | | |
| | 12 | 21 | | 0 -0.016 | 57 | 42 | | | | | 32 | 32 | | 32 | | |
| | 13* | 23 | | | 61 | 43 | | | | | 33 | 34 | | 33 | | |
| | 16 | 28 | | | 70 ±0.3 | 48 | | | | | 38 | 37 | 22 | 31 | | |
| | 20 | 32 | | | 80 | 54 | 8 | 5.5 | 9 | 5.1 | 43 | 42 | 24 | 36 | | |
| | 25 | 40 | 0 -0.012 | 0 -0.019 | 112 | 62 | | | | | 51 | 50 | 32 | 40 | 0.019 | 0.019 |
| | 30 | 45 | | | 123 | 74 | 10 | 6.6 | 11 | 6.1 | 60 | 58 | 35 | 49 | | |
| | 35* | 52 | | | 135 | 82 | | | | | 67 | 64 | 38 | 55 | | |
| | 40* | 60 | 0 -0.015 | 0 -0.022 | 151 | 96 | 13 | 9 | 14 | 8.1 | 78 | 75 | 45 | 64 | 0.025 | 0.025 |
| | 50* | 80 | | | 192 | 116 | | | | | 98 | 92 | 56 | 80 | | |

❗ GJMOC/OE/PQ/PS/QV/QX Not Applicable to Specifications with * Mark

| Model Code | d | Basic Rated Load C(Dynamic)N | Basic Rated Load Co(Static)N | Weight(g) Round Flange Type | Weight(g) Square Flange Type | Weight(g) Opposite Edge Flange Type |
|---|---|---|---|---|---|---|
| GJMOA GJMPQ GJMOB GJMPS GJMOD GJMQT GJMOC GJMQU GJMOE GJMQW GJMPO GJMQV GJMPP GJMQX GJMPR | 6 | 320 | 525 | 30 | 23 | 25 |
| | 8 | 430 | 780 | 50 | 40 | 45 |
| | 10 | 585 | 995 | 95 | 75 | 85 |
| | 12 | 655 | 1115 | 95 | 85 | 100 |
| | 13 | 810 | 1565 | 125 | 105 | 120 |
| | 16 | 1225 | 2340 | 185 | 160 | 180 |
| | 20 | 1350 | 2735 | 255 | 220 | 245 |
| | 25 | 1455 | 3135 | 535 | 495 | 520 |

❗ 1Kgf=9.81N

| Model Code | d | Basic Rated Load C(Dynamic)N | Basic Rated Load Co(Static)N | Weight(g) Round Flange Type | Weight(g) Square Flange Type | Weight(g) Opposite Edge Flange Type |
|---|---|---|---|---|---|---|
| GJMOA GJMPQ GJMOB GJMPS GJMOD GJMQT GJMOC GJMQU GJMOE GJMQW GJMPO GJMQV GJMPP GJMQX GJMPR | 30 | 2485 | 5485 | 675 | 585 | 640 |
| | 35 | 2650 | 6250 | 1020 | 930 | 940 |
| | 40 | 3430 | 8040 | 1550 | 1380 | 1420 |
| | 50 | 6080 | 15900 | 3600 | 3400 | 3430 |

❗ 1Kgf=9.81N

Example

Assembly Diagram

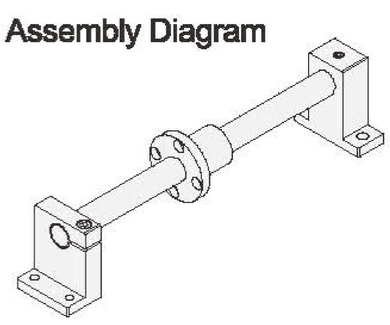
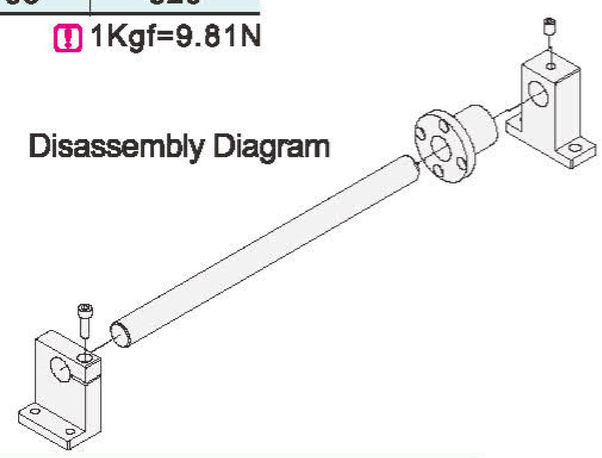
Disassembly Diagram