Linear Bearing with Flange ▸ Double Bush Type Guided Type

Please order according to the diagram

❶~❷ Select the type and parameters in the order of for ordering

Model (❶Code)	–	❷d
GJVDQ	–	d6

Price Excluding Tax (Yuan)

Discounted Price

Quantity	1~9	10~
Price	100%	Separate Quotation

Custom-made / Inventory

Code	Type		Bushing Material International	Bushing Material Equivalent	Bushing Hardness	Surface Treatment	Ball Material	Cage Material	Seal Ring Material	Operating Temperature
GJVDQ	Double Bush Type	Round Flange Type	GCr15	SUJ2	56HRC~	—	GCr15	Resin	Nitrile Rubber	-15~80°C
GJVDR						Electroless Nickel Plating				
GJVEW		Square Flange Type				—				
GJVEX						Electroless Nickel Plating				
GJVFY		Opposite Edge Flange Type				—				
GJVFZ						Electroless Nickel Plating				

- Bushing and ball material are SUJ2, equivalent to GCr15.
- Cage material is resin, equivalent to DURACON M90.

If rust prevention is required, nickel-plated products are preferred!

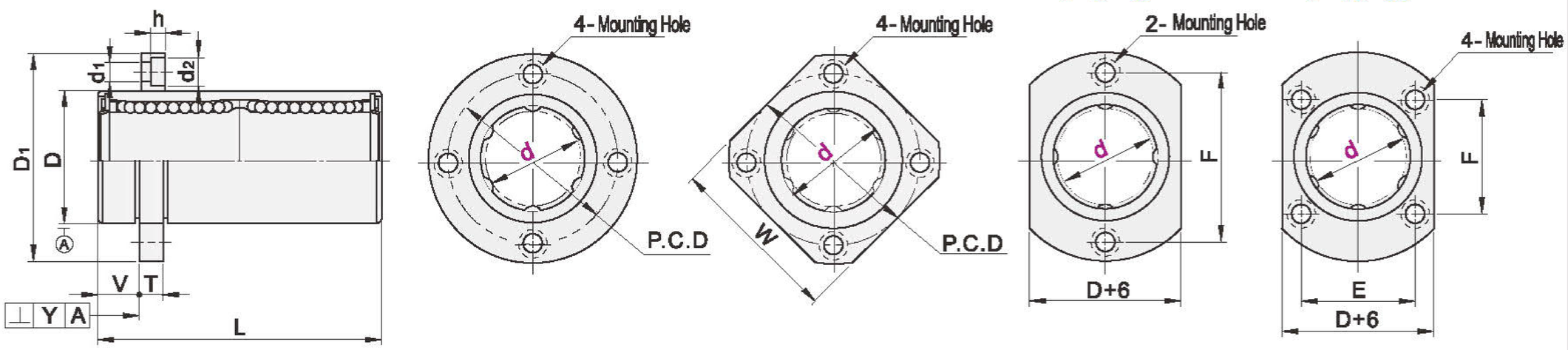

Model Code	d	D Size	D No surface treatment	D With surface treatment	L	V	D1	T	d1	d2	h	P.C.D	W	E	F	Eccentricity	Straightness Y	Basic Rated Load C(Dynamic)N	Basic Rated Load Co(Static)N	Weight(g) Round Flange Type	Weight(g) Square Flange Type	Weight(g) Opposite Edge Flange Type
Round Flange Type GJVDQ GJVDR Square Flange Type GJVEW GJVEX Opposite Edge Flange Type GJVFY GJVFZ	6 (0 -0.010)	12	0 -0.013	0 -0.018	35 (±0.3)	5	28	5	3.5	6	3.1	20	22		20			320	525	30	20	25
	8	15			45		32					24	25		24			430	780	50	40	45
	10	19			55		40					29	30	—	29	0.014	0.014	585	995	95	75	85
	12	21	0 -0.016	0 -0.021	57	6	42	6	4.5	7.5	4.1	32	32		32			655	1115	105	85	100
	13	23			61		43					33	34		33			810	1565	125	105	120
	16	28			70		48					38	37	22	31			1225	2345	185	160	180
	20 (0 -0.012)	32			80	8	54	8	5.5	9	5.1	43	42	24	36			1395	2735	255	220	245
	25	40	0 -0.019	0 -0.025	112		62					51	50	32	40	0.019	0.019	1555	3135	535	495	520
	30	45			123	10	74	10	6.6	11	6.1	60	58	35	49			2485	5485	675	585	640
	35	52			135		82					67	64	38	55			2650	6250	1020	930	940
	40 (0 -0.015)	60	0 -0.022	0 -0.030	151	13	96	13	9	14	8.1	78	75	45	64	0.025	0.025	3430	8040	1550	1380	1420
	50	80			192		116					98	92	56	80			6080	15900	3600	3400	3430

Kgf=N×0.101972

Features of Guided Linear Bearings with Flange:

- It eliminates the need for a bearing seat during installation, simplifying axial positioning.

Notes for Use:

- The entry of foreign matter into the linear bearing may cause damage to the steel ball circulation components or loss of functionality. Please prevent dust, cutting debris, and other foreign matter from entering the bearing.
- Avoid using under conditions exceeding 80℃.
- Dropping or improper striking of the linear bearing may cause damage. Please exercise caution.
- Even if external damage is not visible after impact, it may still result in loss of functionality.
- Wipe off the anti-rust oil carefully and seal in a lubricant before use.
- When storing, please keep the bearing in a designated envelope to avoid exposure to high temperatures, low temperatures, and excessively humid environments.