Linear Bearing with Flange ▸ Single Bush Type Guided Type

Please order according to the diagram

❶~❷ Select the type and parameters in the order of for ordering

Model (❶Code)	–	❷d
GJVXL	–	d10

Price

Quantity	1~9	10~
Price	100%	Separate Quotation

Custom-made / Inventory

Code	Type		Bushing Material International	Bushing Material Equivalent	Bushing Hardness	Bushing Surface Treatment	Ball Material	Cage Material	Seal Ring Material	Operating Temperature
GJVXL	Single Bush Type	Round Flange Type	GCr15	SUJ2	56HRC~	—	GCr15	Resin	Nitrile Rubber	-15~80°C
GJVXM						Electroless Nickel Plating				
GJVYN		Square Flange Type				—				
GJVYP						Electroless Nickel Plating				
GJVZQ		Opposite Edge Flange Type				—				
GJVZR						Electroless Nickel Plating				

- Bushing and ball material are SUJ2, equivalent to GCr15.
- Cage material is resin, equivalent to DURACON M90.

If rust prevention is required, nickel-plated products are preferred!

Round Flange Type

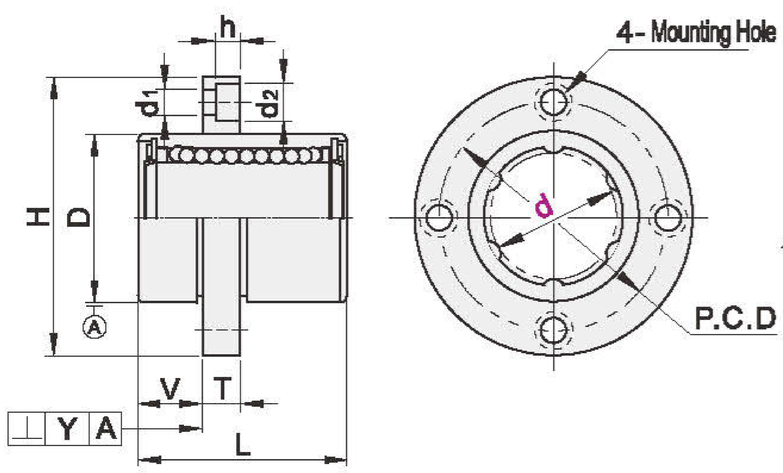

Square Flange Type

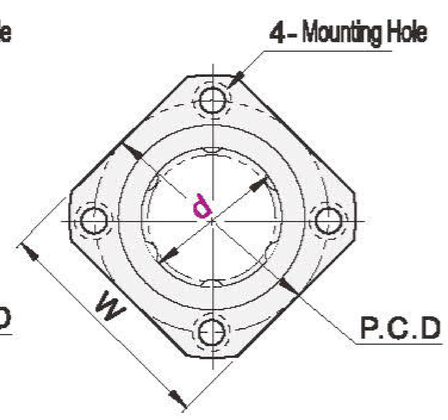

Opposite Edge Flange Type

d=6~13

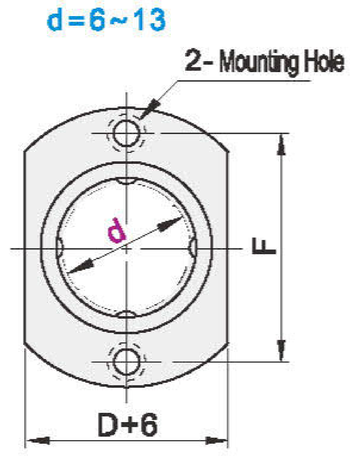

d=16~50

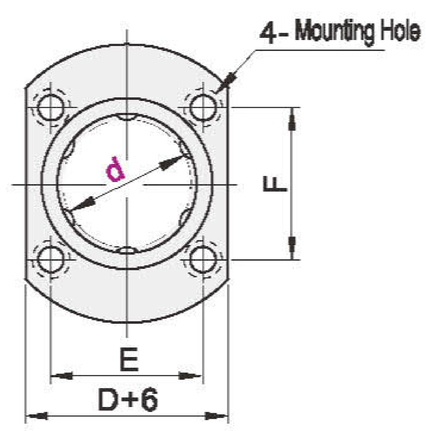

Model Code	d		D Size	D No surface treatment	D With surface treatment	L		V	H	T	d1	d2	h	P.C.D	W	E	F	Eccentricity	Straightness Y	Basic Rated Load C(Dynamic) N	Basic Rated Load Co(Static) N	Weight(g) Round Flange Type	Weight(g) Square Flange Type	Weight(g) Opposite Edge Flange Type
Round Flange Type GJVXL GJVXM / Square Flange Type GJVYN GJVYP / Opposite Edge Flange Type GJVZQ GJVZR	6	0 -0.009	12	0 -0.013	0 -0.018	19	±0.3	5	28	5	3.5	6	3.1	20	22		20	0.011	0.011	205	260	20	15	20
	8		15			24			32					24	25		24			260	375	35	25	30
	10		19	0 -0.016	0 -0.021	29		6	40	6	4.5	7.5	4.1	29	30	—	29			370	545	70	50	60
	12		21			30			42					32	32		32			410	595	75	55	65
	13		23			32			43					33	34		33			505	780	85	70	80
	16		28			37			48					38	37	22	31			770	1175	115	100	110
	20		32			42		8	54	8	5.5	9	5.1	43	42	24	36			880	1365	175	140	165
	25	0 -0.010	40	0 -0.019	0 -0.025	59			62					51	50	32	40	0.014	0.014	975	1565	335	295	320
	30		45			64		10	74	10	6.6	11	6.1	60	58	35	49			1565	2735	465	370	385
	35		52			70			82					67	64	38	55			1670	3140	650	560	575
	40	0 -0.012	60	0 -0.022	0 -0.030	80		13	96	13	9	14	8.1	78	75	45	64	0.020	0.020	2160	4020	1060	880	910
	50		80			100			116					98	92	56	80			3820	7940	2200	2000	2030

1Kgf=9.81N