Linear Bearing Box Unit ▸ Double Bush Type / Medium length type / Extended Type
Widened Square Type

Please order according to the diagram

❶~❷ Select the type and parameters in the order of for ordering

Double Bush Type

Model (❶Code)	–	❷d
GPDGL	–	d8

Price Excluding Tax (Yuan)

Discounted Price

Quantity	1~9	10~
Price	100%	Separate Quotation

Custom-made / Inventory

CAD 2D 3D

Code	Type	Bearing in Use Code	Fixing Seat Material	Fixing Seat Surface Treatment	Operating Temperature
GPDGL	Double Bush Type	GHBAS	Aluminum Alloy	Natural Anodizing	-15~80°C
GPDGM	Double Bush Type	GHBAV	Aluminum Alloy	Natural Anodizing	-15~80°C
GPDEN	Medium length type	GHBAS	Aluminum Alloy	Natural Anodizing	-15~80°C
GPDFO	Extended Type	GHBAS	Aluminum Alloy	Natural Anodizing	-15~80°C

Double Bush Type

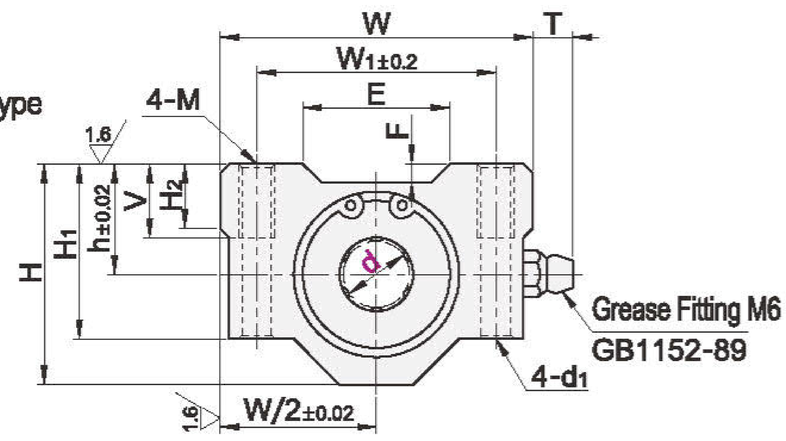

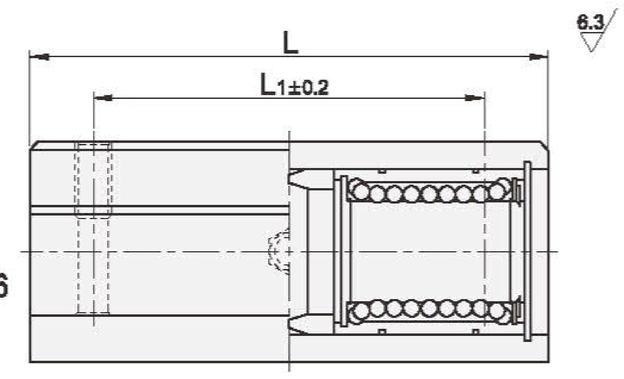

Medium length type

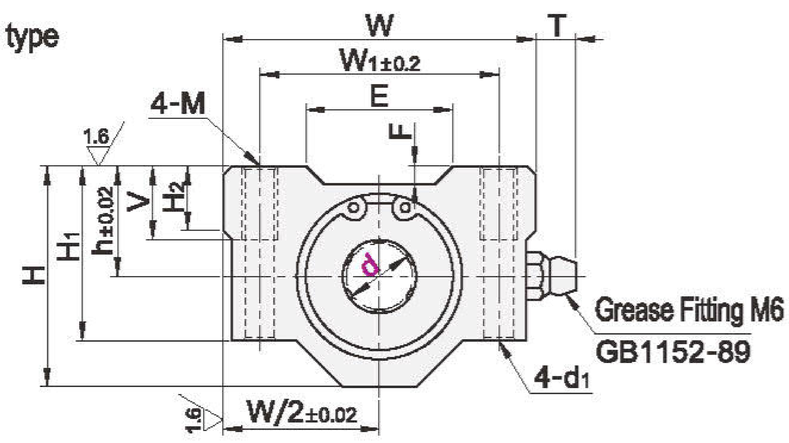

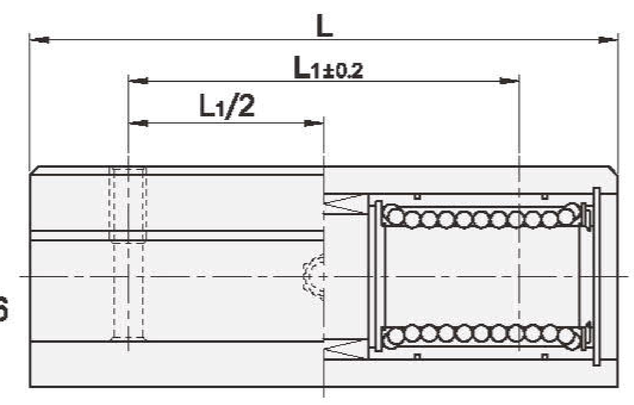

Extended Type

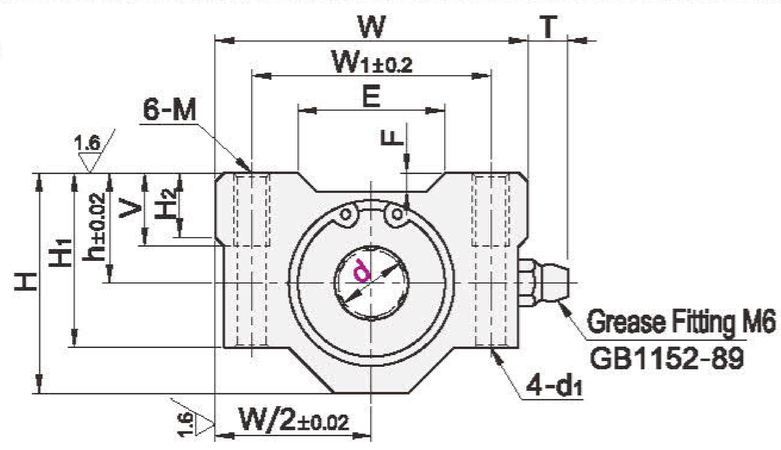

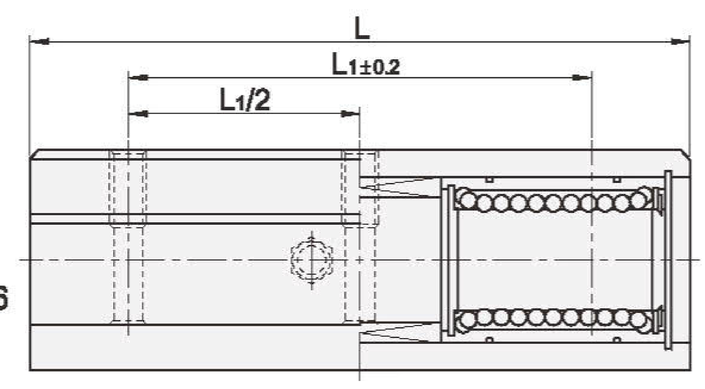

Double Bush Type

Model Code	d		L	L1	h	H	H1	H2	W	W1	M	d1	V	E	F	T	Basic Rated Load C(Dynamic)N	Basic Rated Load C0(Static)N	Static Allowable Moment (N·m)	Weight(g)
GPDGL GPDGM	8	0 -0.010	58	42	11	22	18	6	34	24	M4	3.4	8	16	0.4	7.5	430	785	4.30	100
	10		68	46	13	26	21	8	40	28	M5	4.3	12	15.5		7	585	1105	7.25	175
	12		70	50	15	28	24		42	30.5				17.5			655	1205	10.8	200
	13		75			30	24.5		44	33				19	0.85		810	1575	11.5	235
	16		85	60	19	38.5	32.5	9	50	36				19.8		6.5	1235	2355	19.5	395
	20	0 -0.012	96	70	21	41	35	11	54	40	M6	5.2	18	21	0.5	7.5	1405	2745	26.5	565
	25		130	100	26	51.5	42	12	76	54	M8	7		36	1	4.5	1565	3145	43.5	1115
	30		140	110	30	59.5	49	15	78	58				39.9	0.75	5.5	2495	5495	82.5	1475
GPDGL	35	0 -0.015	155	120	34	68	54	18	90	70	M8	7	18	53	1.5	6	2645	6265	118	2195
	40		175	140	40	78	62	20	102	80	M10	8.7	25	61		5.5	3425	8035	145	3195
	50		215	160	52	102	80	25	122	100				81			6075	15895	395	6695

1N≈0.102kgf

Medium length type

Model Code	d		L	L1	h	H	H1	H2	W	W1	M	d1	V	E	F	T	Basic Rated Load C(Dynamic)N	Basic Rated Load C0(Static)N	Static Allowable Moment (N·m)	Weight(g)
GPDEN	16	0 -0.015	100	74	19	38.5	32.5	9	50	36	M5	4.3	12	19.8	0.85	6.5	1235	2355	25.6	445
	20		115	84	21	41	35	11	54	40	M6	5.2		21	0.5	7.5	1405	2745	35.1	585
	25	0 -0.018	160	118	26	51.5	42	12	76	54	M8	7	18	36	1	4.5	1565	3145	63.2	1395
	30		170	130	30	59.5	49	15	78	58				39.9	0.75	5.5	2495	5495	105	1690

1N≈0.102kgf

Extended Type

Model Code	d		L	L1	h	H	H1	H2	W	W1	M	d1	V	E	F	T	Basic Rated Load C(Dynamic)N	Basic Rated Load C0(Static)N	Static Allowable Moment (N·m)	Weight(g)
GPDFO	10	0 -0.012	93	70	13	26	21	8	40	28	M5	4.3	12	15.5	0.4	7.5	585	1105	27.1	240
	12	0 -0.015	96	72	15	28	24		42	30.5				17.5		7	655	1205	40.2	285
	16		118	88	19	38.5	32.5	9	50	36				19.8	0.85	6.5	1235	2355	73.6	525
	20	0 -0.018	134	100	21	41	35	11	54	40	M6	5.2	18	21	0.5	7.5	1405	2745	98.1	680
	25		185	138	26	51.5	42	12	76	54	M8	7		36	1	4.5	1565	3145	156	1585
	30		200	150	30	59.5	49	15	78	58				39.9	0.75	5.5	2495	5495	295	1955

1N≈0.102kgf