Linear Bearing Box Unit ▸ Short Type / Single Bush Type / Medium Type
Widened Square Type

Please order according to the diagram

❶~❷ Select the type and parameters in the order of for ordering

Short Type

Model (❶Code)	–	❷d
GPDAG	–	d8

Price Excluding Tax (Yuan)

Discounted Price

Quantity	1~9	10~
Price	100%	Separate Quotation

Custom-made / Inventory

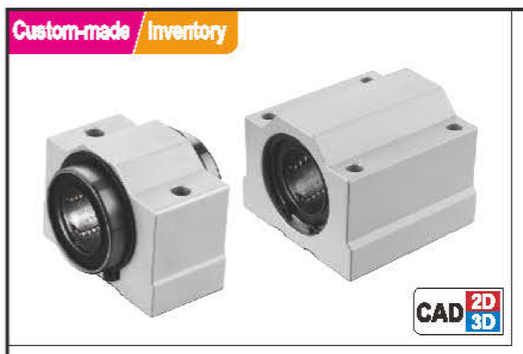

Code	Type	Bearing in Use Code	Fixing Seat Material	Fixing Seat Surface Treatment	Operating Temperature
GPDAG	Short Type	GHBAS	Aluminum Alloy	Natural Anodizing	-15~80°C
GPDBH	Single Bush Type	GHBAR/GHBAS/GHBBW			
GPDBJ		GHBAU			
GPDCK	Medium Type	GHEAE/GHEBF			

Short Type

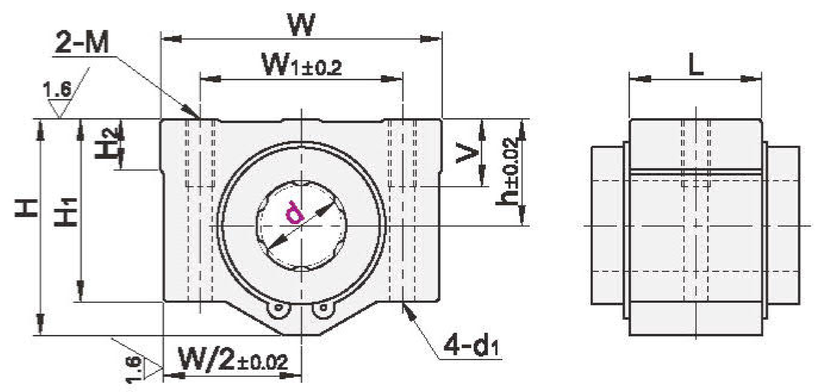

Single Bush Type

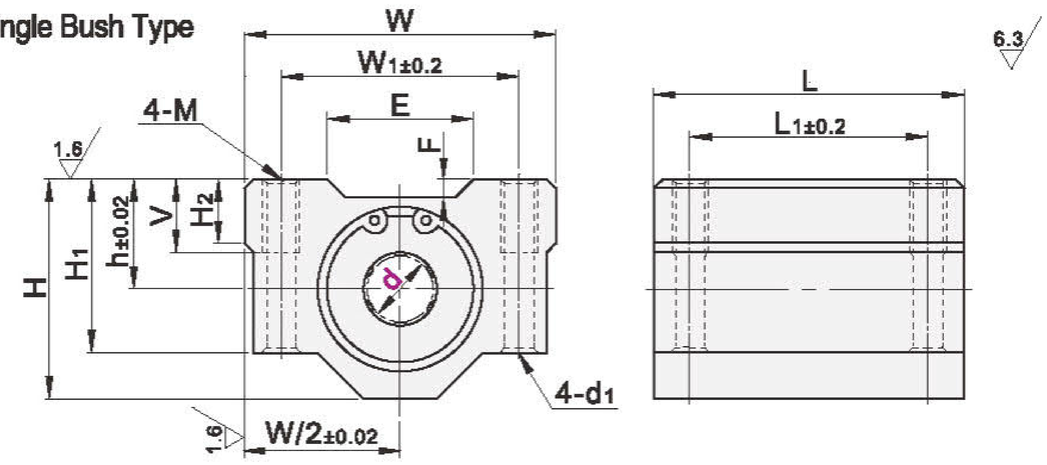

Medium Type

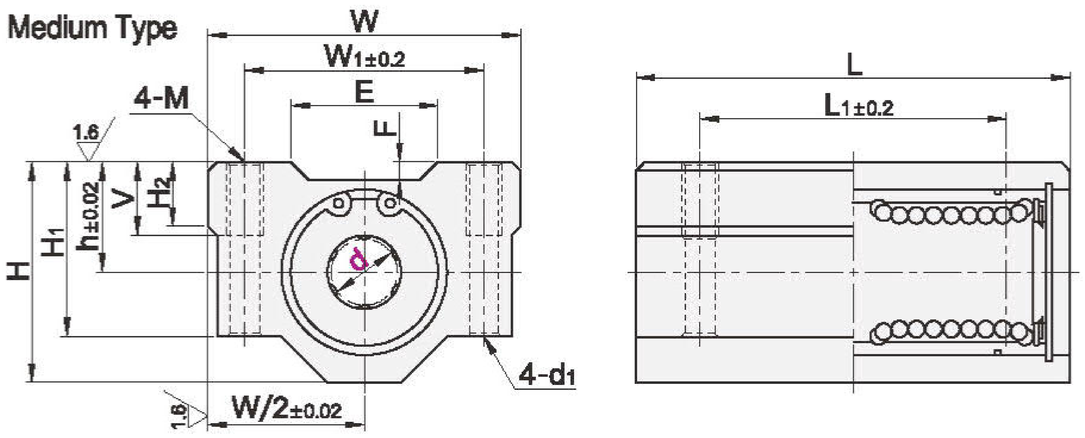

Example

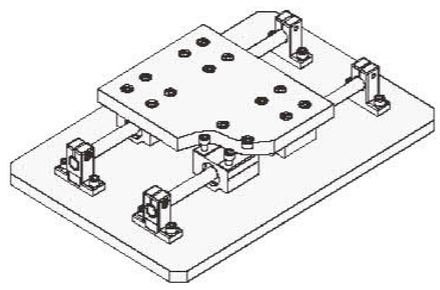

Single Bush Type

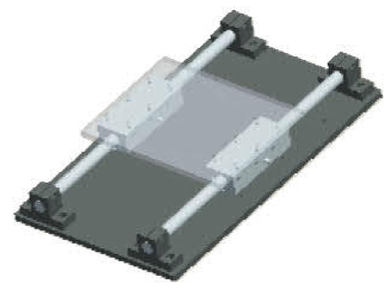

Double Bush Type

Short Type

Model Code	d		L	h	H	H1	H2	W	W1	M	d1	V	Basic Rated Load C(Dynamic)N	Basic Rated Load Co(Static)N	Weight(g)
GPDAG	8	0 -0.009	15.4	11	22	18	6	34	24	M4	3.4	8	260	375	36
	10		19.5	13	26	21	8	40	28	M5	4.3	12	370	545	63
	12		20.5	15	28	24		42	30.5				410	595	74
	16		23.5	19	38.5	32.5	9	50	36				770	1175	132
	20	0 -0.010	27.4	21	41	35	11	54	40	M6	5.2		880	1365	170
	25		37.4	26	51.5	42	12	76	54	M8	7.0	18	975	1565	405
	30		40.9	30	59.5	49	15	78	58				1565	2735	495
	35	0 -0.012	45.4	34	68	54	18	90	70	M10	8.7	25	1665	3135	790
	40		56.4	40	78	62	20	102	80				2155	4015	1220
	50		68.9	52	102	80	25	122	100				3815	7935	2300

1N≈0.102kgf

Single Bush Type

Model Code	d		L	L1	h	H	H1	H2	W	W1	M	d1	V	E	F	Basic Rated Load C(Dynamic)N	Basic Rated Load Co(Static)N	Weight(g)
GPDBH GPDBJ	8	0 -0.009	30	18	11	22	18	6	34	24	M4	3.4	8	16	0.4	260	385	50
	10		35	21	13	26	21	8	40	28	M5	4.3	12	15.5		370	545	90
	12		36	26	15	28	24		42	30.5				17.5		410	595	100
	13		39			30	24.5		44	33				19	0.85	515	785	125
	16		44	34	19	38.5	32.5	9	50	36				19.8		770	1185	250
	20	0 -0.010	50	40	21	41	35	11	54	40	M6	5.2		21	0.5	880	1375	
	25		67	50	26	51.5	42	12	76	54	M8	7	18	36	1	985	1575	595
	30		72	58	30	59.5	49	15	78	58				39.9	0.75	1575	2745	730
GPDBH	35	0 -0.012	80	60	34	68	54	18	90	70				53	1.5	1660	3130	995
	40		90		40	78	62	20	102	80	M10	8.7	25	61		2150	4010	1585

1N≈0.102kgf

Medium Type

Model Code	d		L	L1	h	H	H1	H2	W	W1	M	d1	V	E	F	Basic Rated Load C(Dynamic)N	Basic Rated Load Co(Static)N	Weight(g)
GPDCK	6	0 -0.010	35	24	9	18	15	6	30	20	M4	3.4	8	12	0.4	225	310	48
	8		43	28	11	22	18		34	24				16		310	450	78
	10		53	34	13	26	21	8	40	28	M5	4.3	12	15.5		505	715	142
	12			38	15	28	24		42	30.5				17.5		630	810	144
	16		63	48	19	38.5	32.5	9	50	36				19.8	0.85	1160	1445	323
	20	0 -0.012	73	56	21	41	35	11	54	40	M6	5.2		21	0.5	1550	2065	382
	25		93	66	26	51.5	42	12	76	54	M8	7	18	36	1	1725	3065	866

1Kgf=9.81N

www.fh-fa.com ⋙ Self-service selection / Free 2D-3D drawing downloads
Reduce purchasing costs! Reduce design time by more than 60%!