Support Bearing Box Unit ▸ Standard type / Widened Type
Flange Type

Please order according to the diagram

❶~❹ Select the type and parameters in the order of for ordering

Single Piece (Slider): Model (❶Code) – ❷d
GQDFB – d16

Assembly (Slider+Rail): Model (❶Code) – ❷d – ❸L – ❹Number of Sliders
GQDCA – d16 – L400 – 2

Custom-made / Inventory

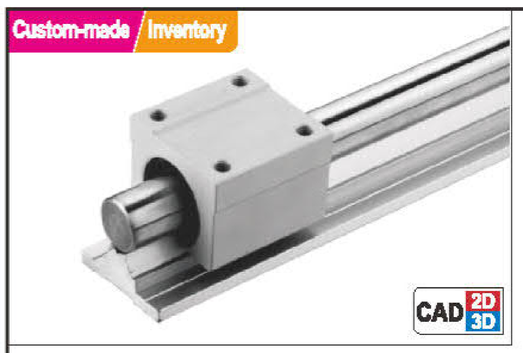

Code	Type		Material: Slider	Material: Rail	Material: Bearing	Surface Treatment: Slider
GQDCA	Assembly (Slider+Rail)	Standard type	SUJ2	Aluminum Alloy	SUJ2	Natural Anodizing
GQDBC		Widened Type				
GQDFB	Single Piece (Slider)	Standard type	—			
GQDEF		Widened Type				

This product is only suitable for horizontal installation, with the load acting vertically on the sliders. Other usage methods are not recommended!

For length dimensions L exceeding 3000mm, a splicing solution can be adopted. Please provide special notes or customized drawings if needed.

Standard type

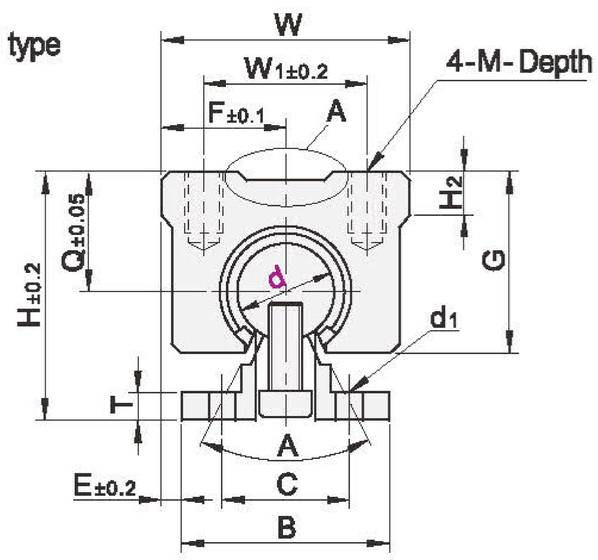

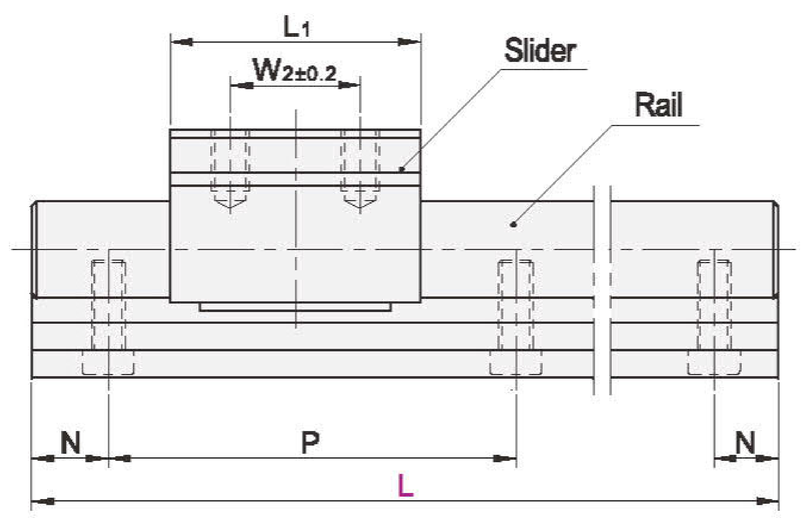

The structure of the slider installation surface at Part A may vary depending on the specifications, but this does not affect the installation and use of the product.

N=[L-(K-1)×P]/2, K represents the number of mounting holes.

When installing the guide rail: It is recommended to use short-head hexagon socket head cap screws of the TAF01 type.

Widened Type

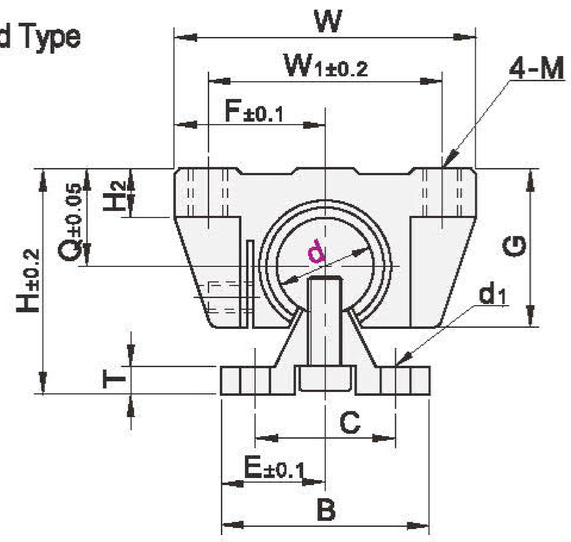

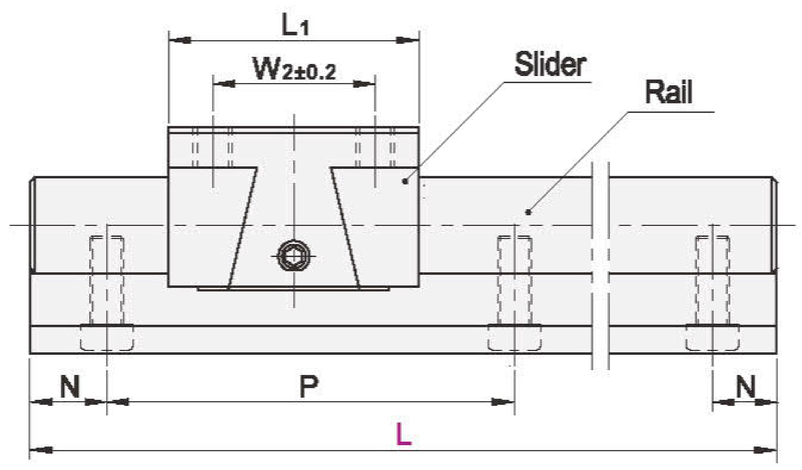

N=[L-(K-1)×P]/2, K represents the number of mounting holes.

Standard type

Model: Code	d	Slider Size: L1	F	G	H2	W	W1	W2	A	M-Depth	Q	Basic Rated Load: C(Dynamic)N	Co(Static)N
Single Piece (Slider) GQDFB	16	45	22.5	33	9	45	32	30	80°	M5-12	20	770	1170
	20	50	24	39	11	48	35	35	60°	M6-12	23	860	1370
	25	65	30	47	14	60	40	40			27	980	1560
	30	70	35	56	15	70	50	50		M8-18	33	1560	2740
	35	80	40	63	18	80	55	55	50°		37	1660	3130
	40	90	45	72	20	90	65	65		M10-20	42	2150	4010
	50	110	60	91	25	120	94	80			53	3820	7930

Model: Code	d	L Minimum Unit 1	Number of Sliders	B	C	P	E	H	d1	T	Weight(g): Box Unit (kgf)	Rail (kgf/m)
Assembly (Slider+Rail) GQDCA	16	200~3000	无指定(无滑块) 1~10	40	30	150	2.5	45	5.5	5	0.15	2.56
	20			45	30		1.5	50			0.20	3.50
	25			55	35		2.5	60	6.6	6	0.45	5.30
	30			60	40		5	70		7	0.63	7.38
	35			65	45	200	7.5	80	9	8	0.92	9.68
	40			75	55			90		9	1.33	12.69
	50			95	70		12.5	115	11	11	3	20.65

Component Price = (Unit Price per Meter of Guide Rail x Length of Guide Rail) + (Unit Price of Slider x Number of Sliders)

Widened Type

Model: Code	d	Slider Size: L1	F	G	H2	W	W1	W2	M	Q	Basic Rated Load: C(Dynamic)N	Co(Static)N
Single Piece (Slider) GQDEF	16	42	31	26	8	62	50	30	M5	18	392	490
	20	51	34	31	10	68	54	37	M6	21	784	1176
	25	65	41	41	12	82	65	50	M8	28	1568	2352
	30	75	45.5	48		91	75	60		34	1764	2940

Model: Code	d	L Minimum Unit 1	Number of Sliders	B	C	P	E	H	d1	T	Weight(g): Box Unit (kgf)	Rail (kgf/m)
Assembly (Slider+Rail) GQDBC	16	200~3000	无指定(无滑块) 1~10	50	37	150	25	40	5.5	5.8	0.18	2.45
	20			55	40		27.5	50		6.6	0.30	3.60
	25			65	45	200	32.5	60	6.6	7.8	0.60	5.60
	30			75	55		37.5	70		10	0.90	8.00

Component Price = (Unit Price per Meter of Guide Rail x Length of Guide Rail) + (Unit Price of Slider x Number of Sliders)

www.fh-fa.com ⋙ Self-service selection / Free 2D-3D drawing downloads
Reduce purchasing costs! Reduce design time by more than 60%!